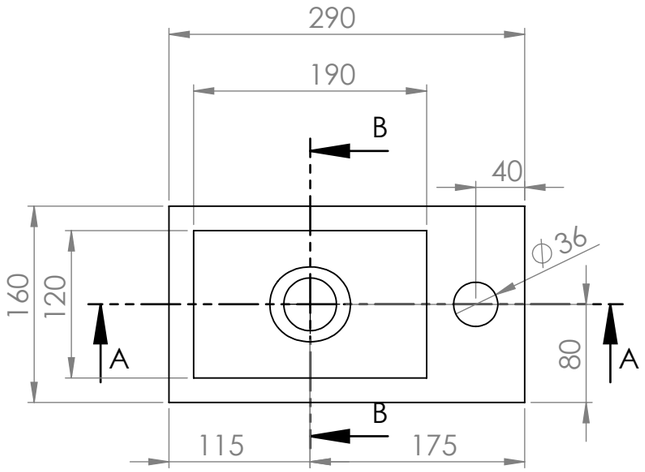

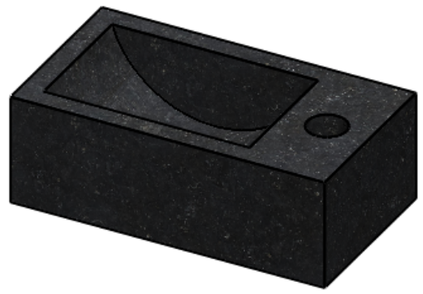

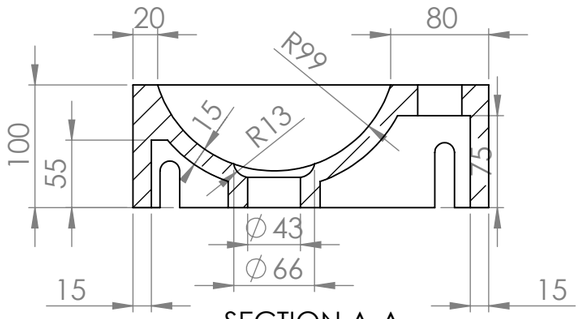

SECTION A-A

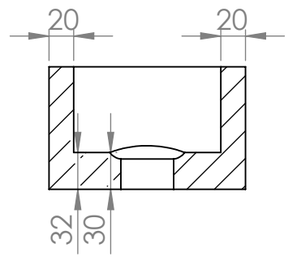

SECTION B-B

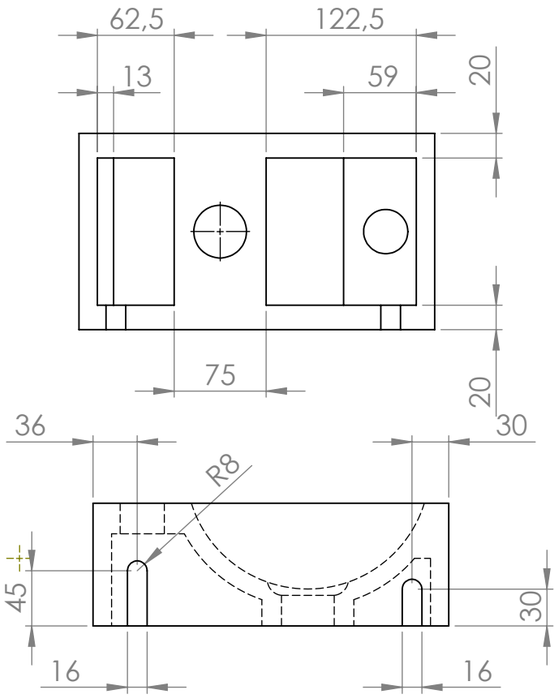

UNLESS OTHERWISE SPECIFIED: DIMENSIONS ARE IN MILLIMETERS SURFACE FINISH: TOLERANCES: LINEAR: ANGULAR:	FINISH:	DEBUR AND BREAK SHARP EDGES	DO NOT SCALE DRAWING / REVISION
			TITLE: VenetiaXS
	NAME		forzalaqua To endure the power of water
DRAWN	E. Anninga		
APPV'D	R. Straten		
MFG			
Q.A		MATERIAL:	DWG NO. / A3
			SCALE:1: 8 / SHEET 1 OF 1