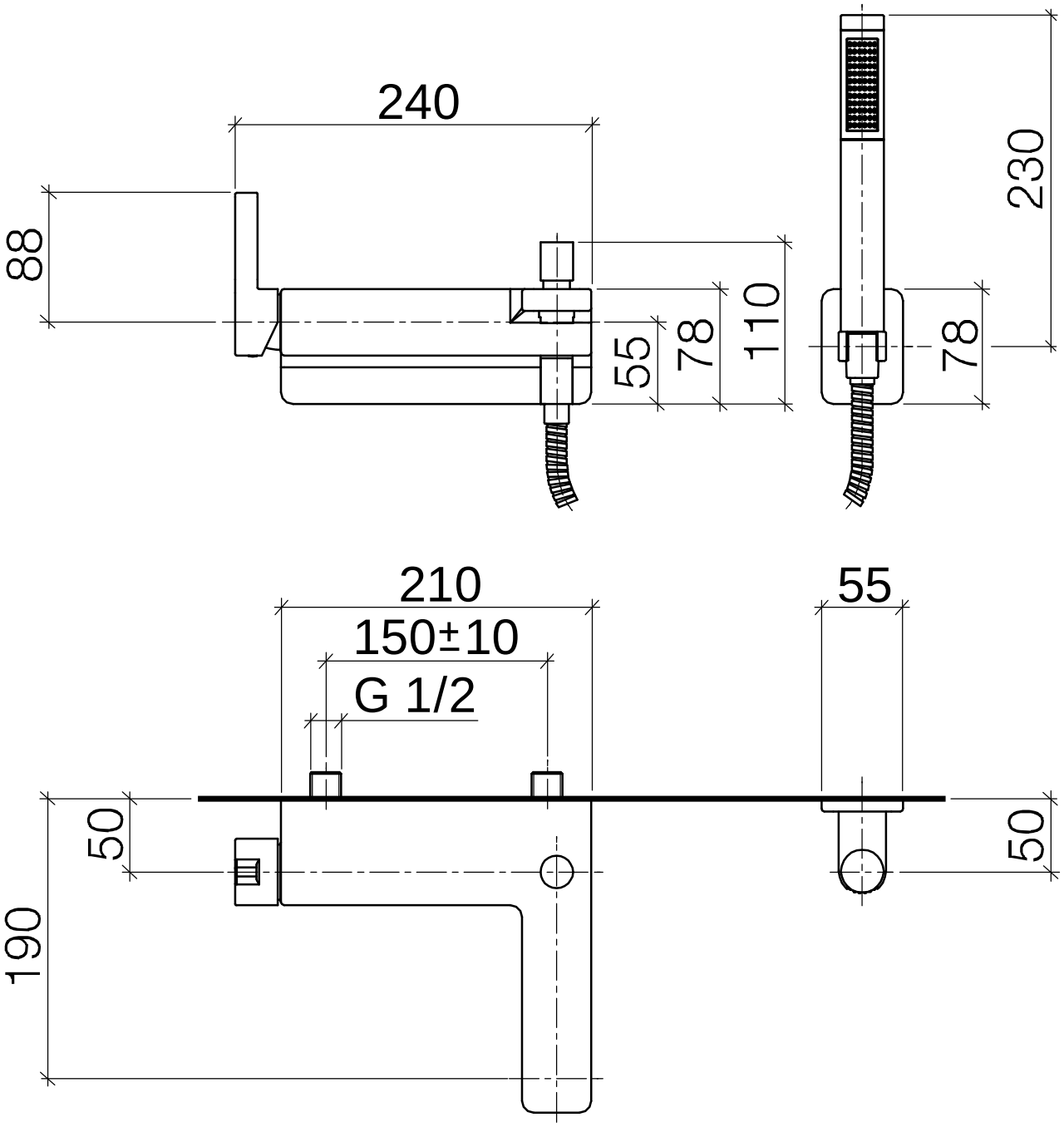

33.233.710-FF