CAR60X / CAR70X / CAR80X
CAC4GX / CAC6GX / CAC7GX
CAC9GX / ABR90 / ABR10 / ABR12
Instruction Manual

SET A(Page 3-5)

SET B(Page 6-9)

SET C(Page 6-13)

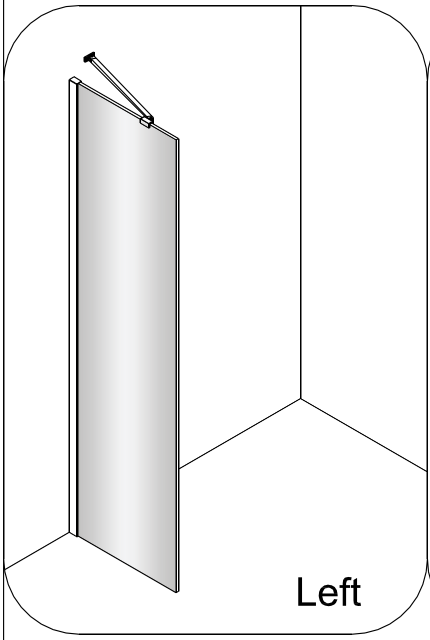

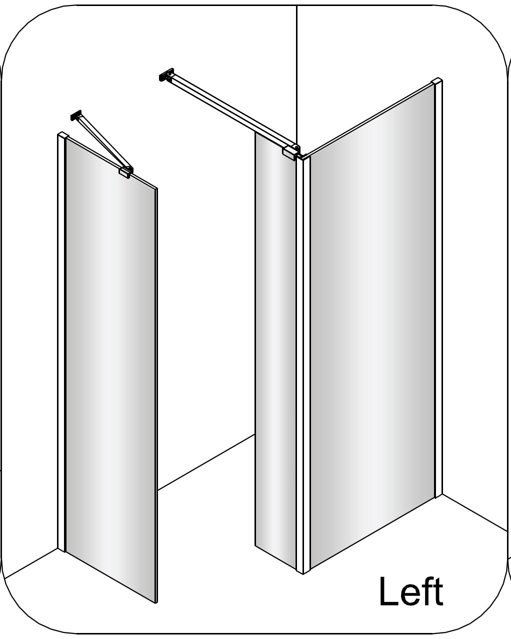

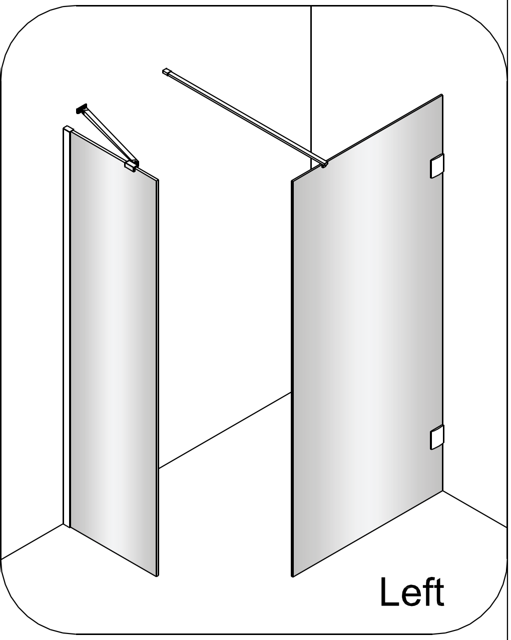

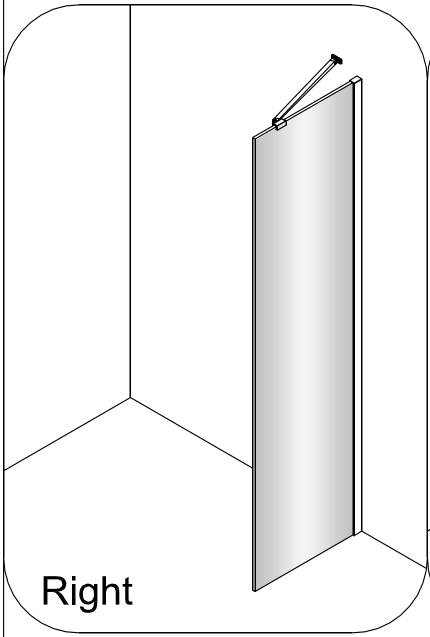

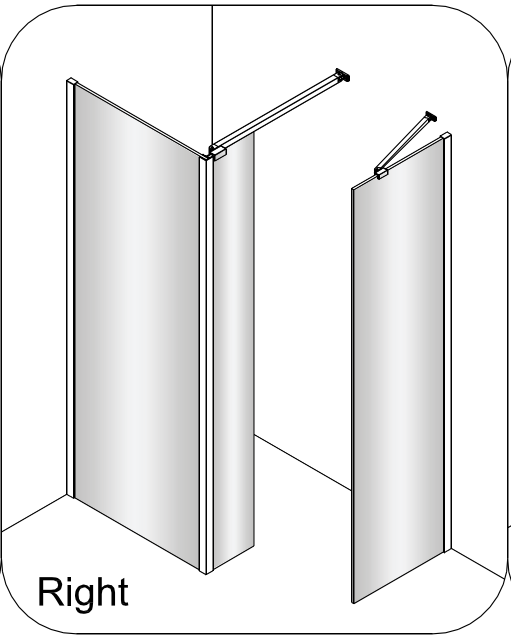

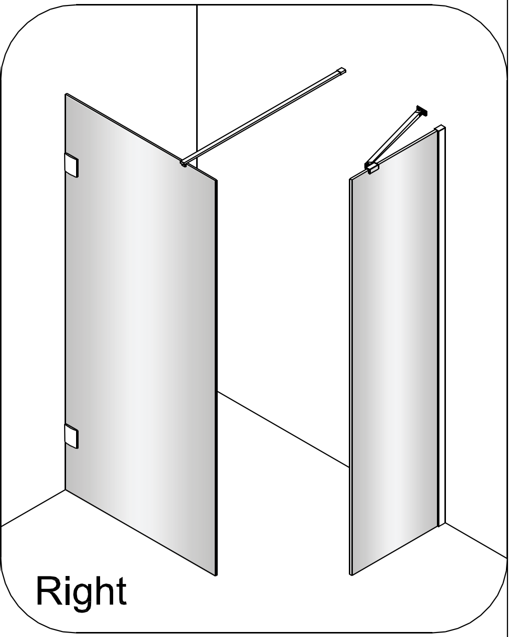

BOX 1

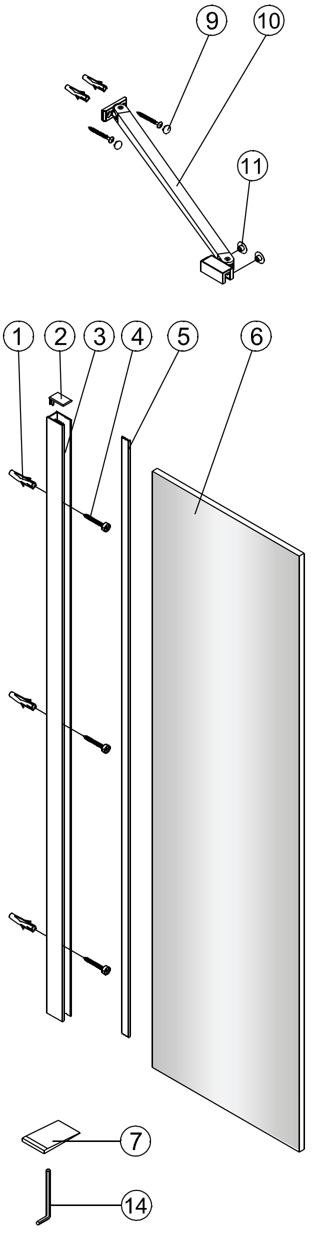
9
10
11
1
2
3
4
5
6
7
14

No.	QUANTITY
1	5
2	1
3	1
4	5
5	1
6	1
7	4
9	2
10	1
11	2
14	1

BOX 2

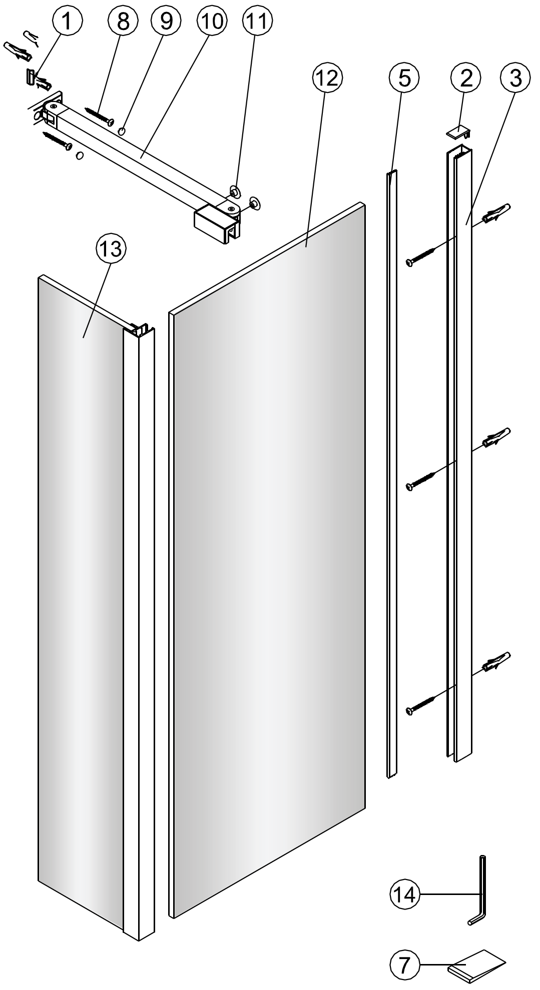
1
8
9
10
11
12
5
2
3
13
14
7

No.	QUANTITY
1	5
2	1
3	1
5	1
7	6
8	5
9	2
10	1
11	2
12	1
13	1
14	1

BOX 3

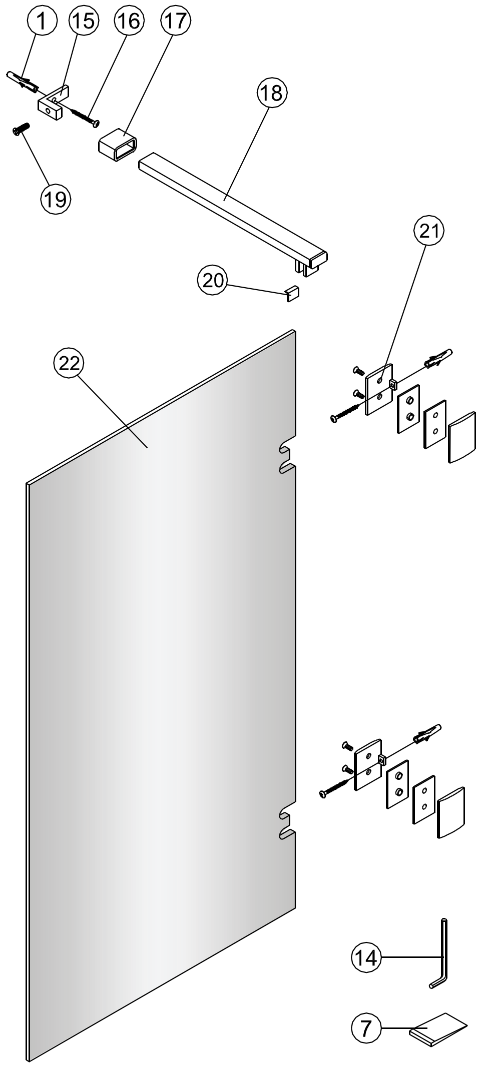
1
15
16
17
18
19
20
21
22
14
7

No.	**QUANTITY**
1	**3**
7	**4**
14	**1**
15	**1**
16	**3**
17	**1**
18	**1**
19	**1**
21	**2**
22	**1**

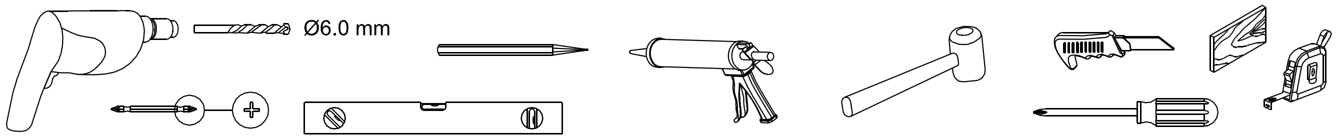

①

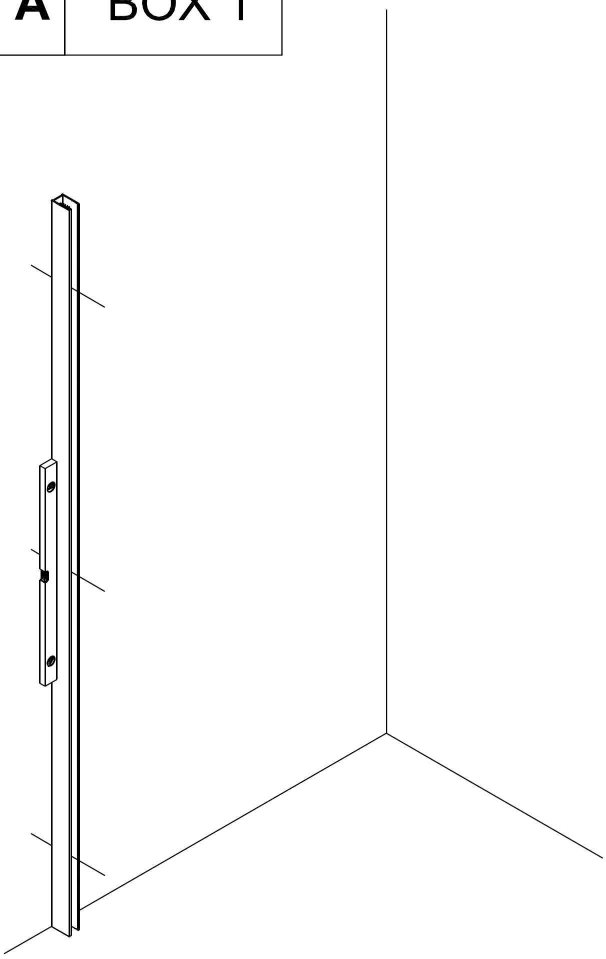

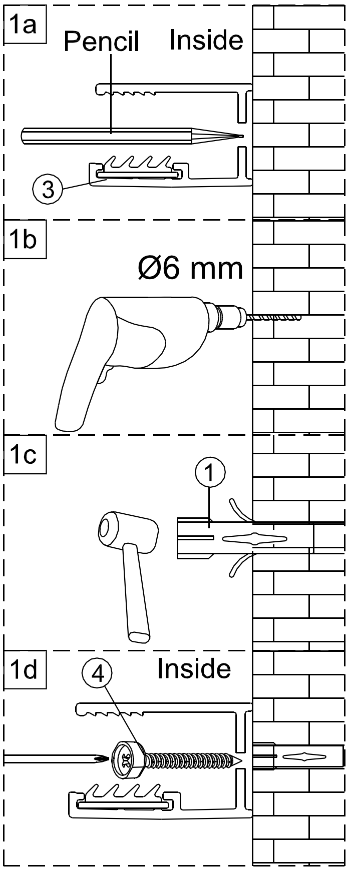
1a
Pencil
Inside
3
1b
Ø6 mm
1c
1
1d
4
Inside

②

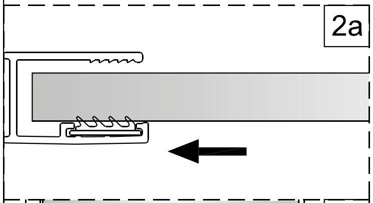

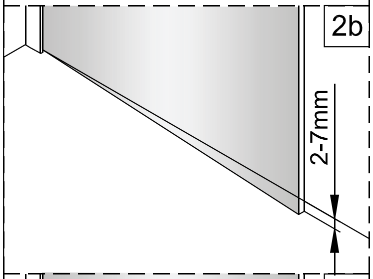

When the bottom fixed door is not in line with the floor or tray edge, the setting wedge 7 will be needed and can pad 2-7mm.

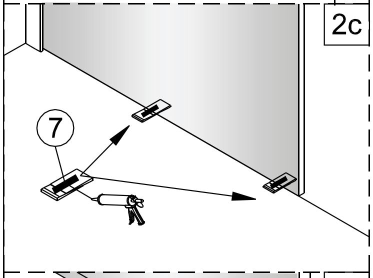

Put silicone on the two wedges and place them to level the fixed door.

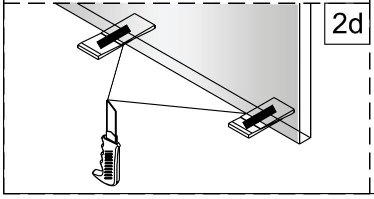

Cut the extra part along the bottom edge of fixed door.

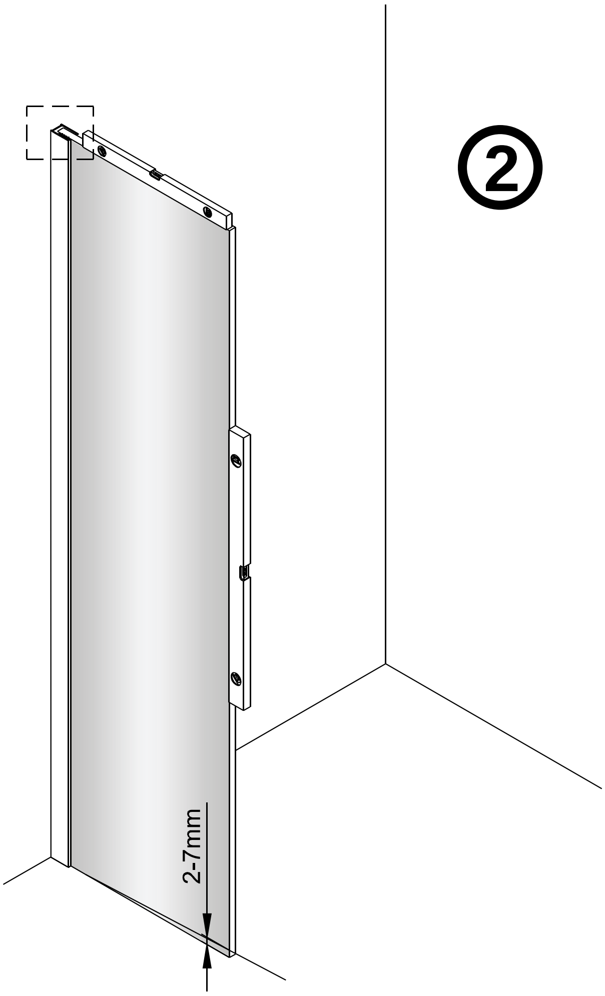

③

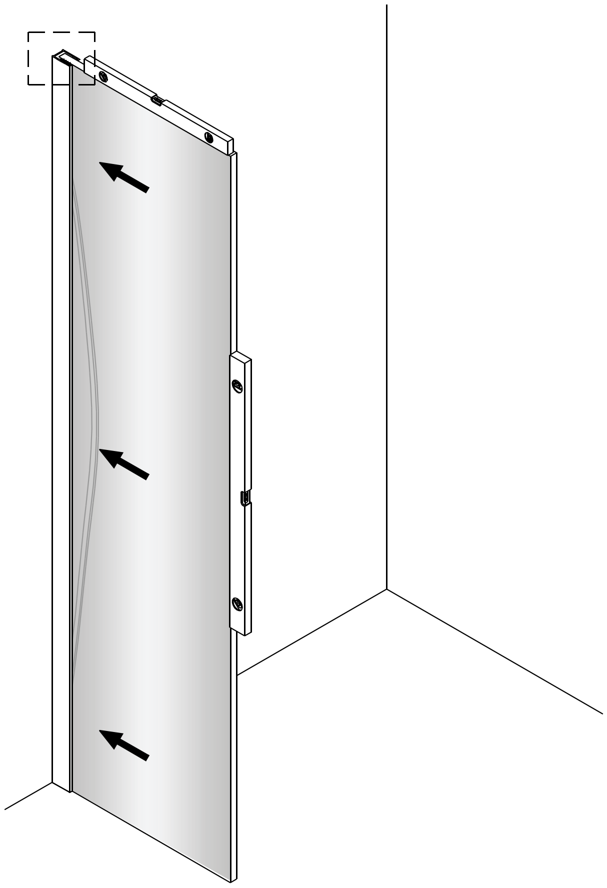

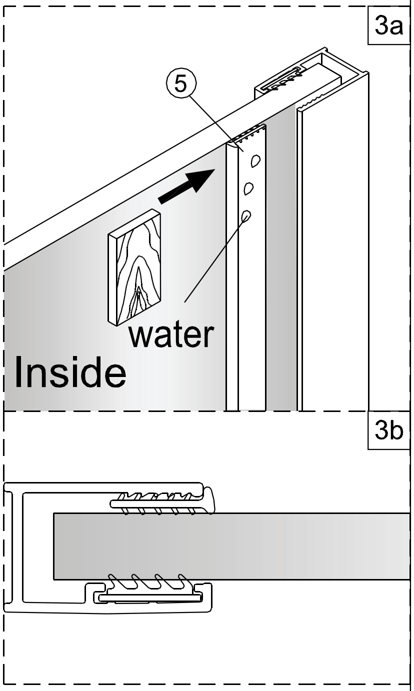
3a
5
water
Inside
3b

④

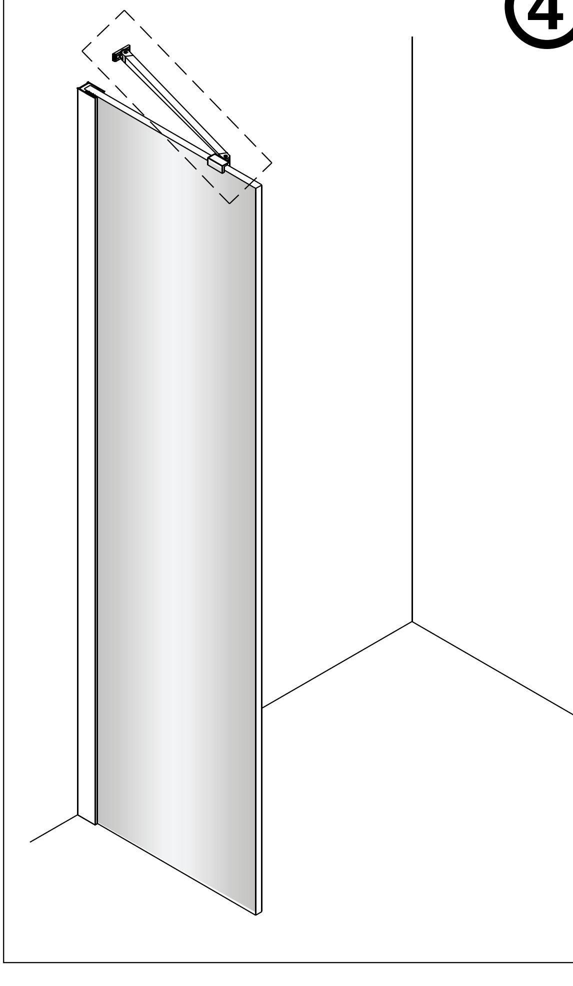

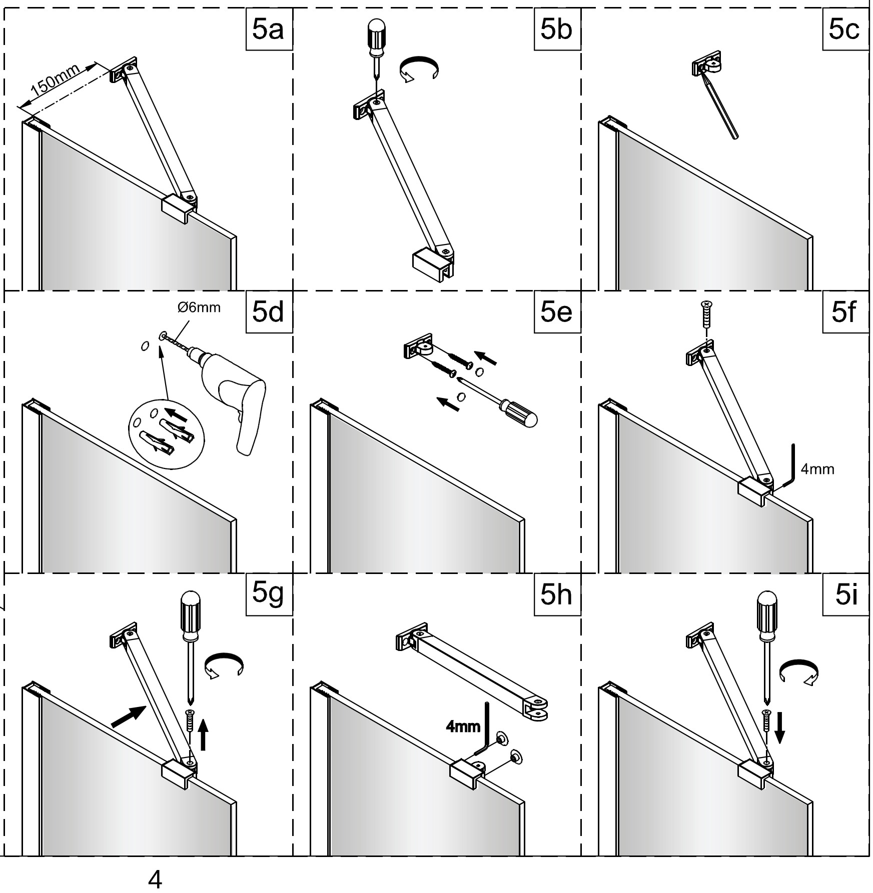
5a
150mm
5b
5c
5d
Ø6mm
5e
5f
4mm
5g
5h
4mm
5i

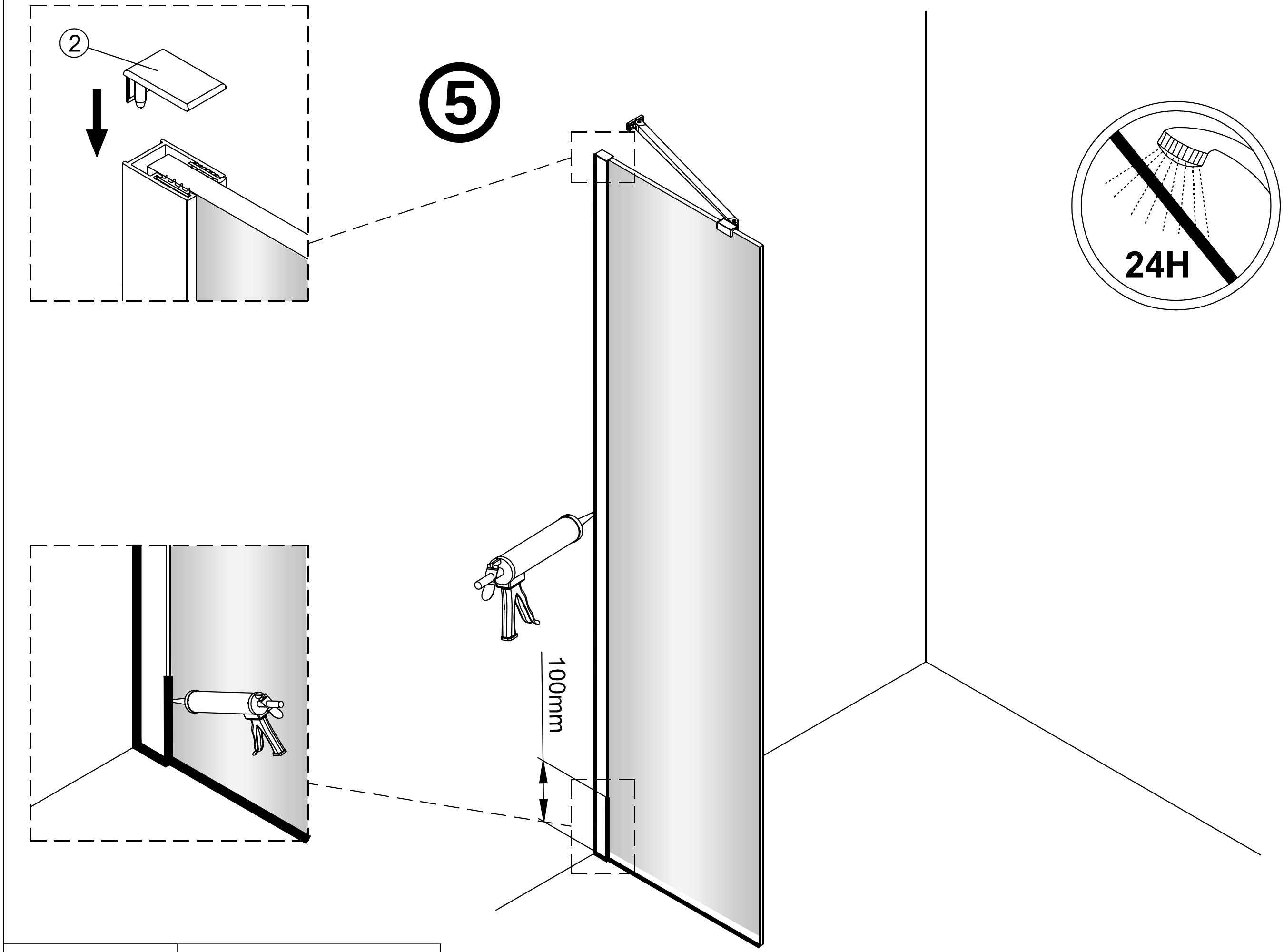
⑤
2
24H
100mm

SET B BOX 1+BOX 2

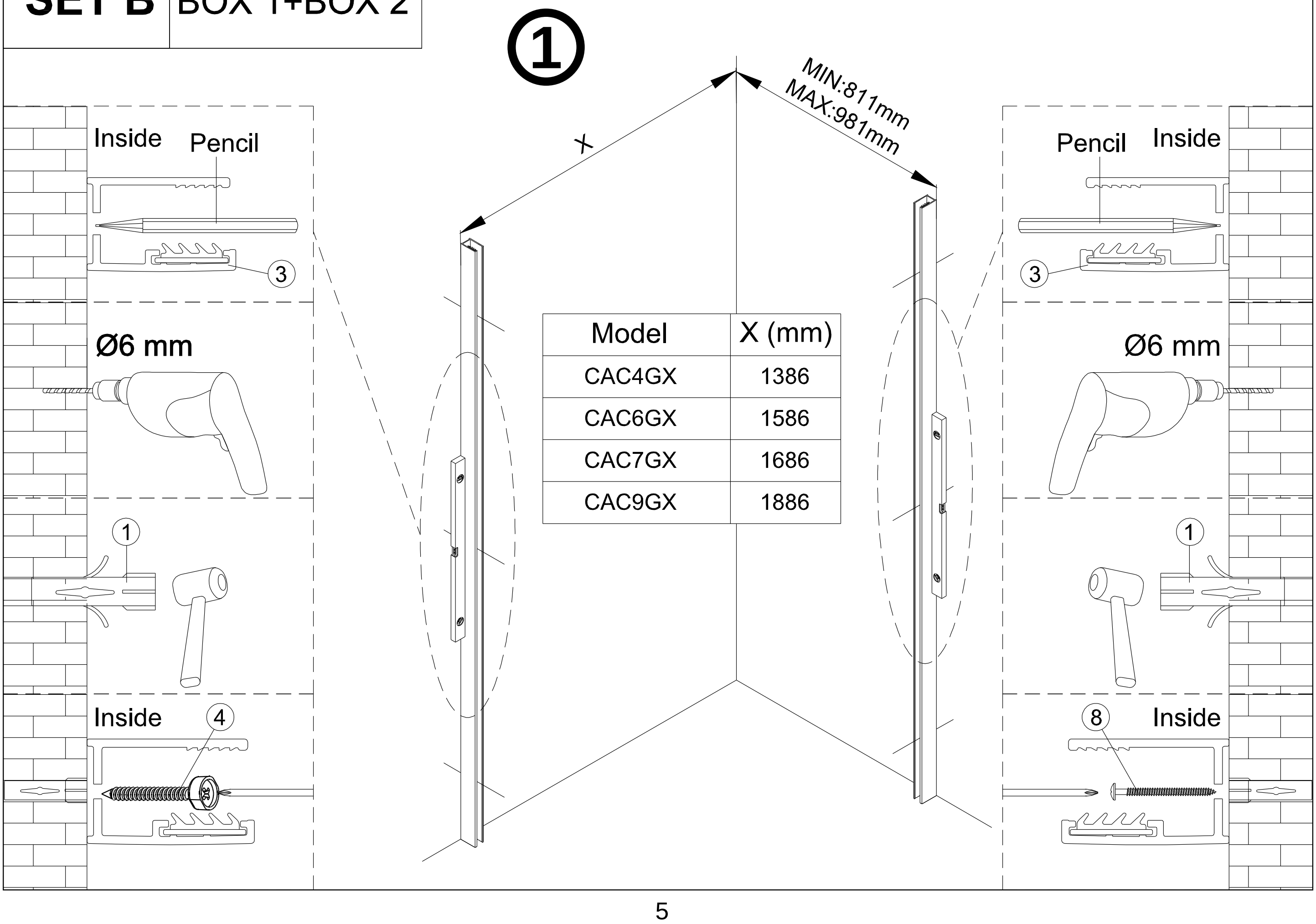
①
X
MIN:811mm
MAX:981mm
Inside
Pencil
3
Ø6 mm
1
Inside
4
Pencil
Inside
3
Ø6 mm
1
8
Inside

Model	X (mm)
CAC4GX	1386
CAC6GX	1586
CAC7GX	1686
CAC9GX	1886

②

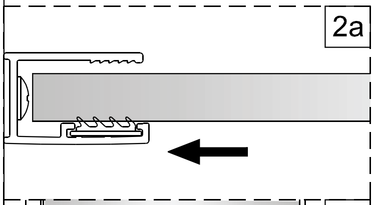

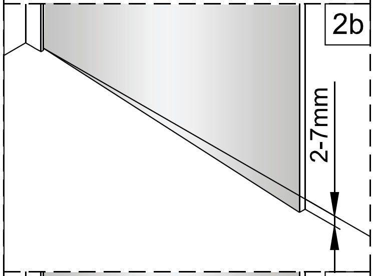

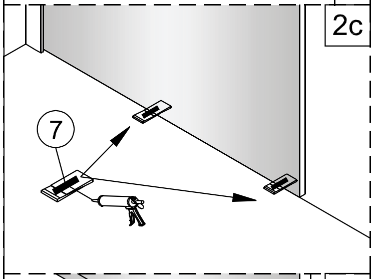

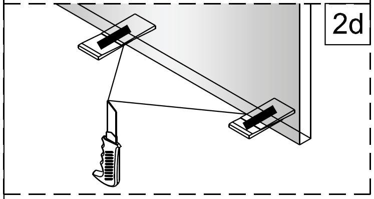

When the bottom fixed door is not in line with the floor or tray edge, the setting wedge 7 will be needed and can pad 2-7mm.

Put silicone on the two wedges and place them to level the fixed door.

Cut the extra part along the bottom edge of fixed door.

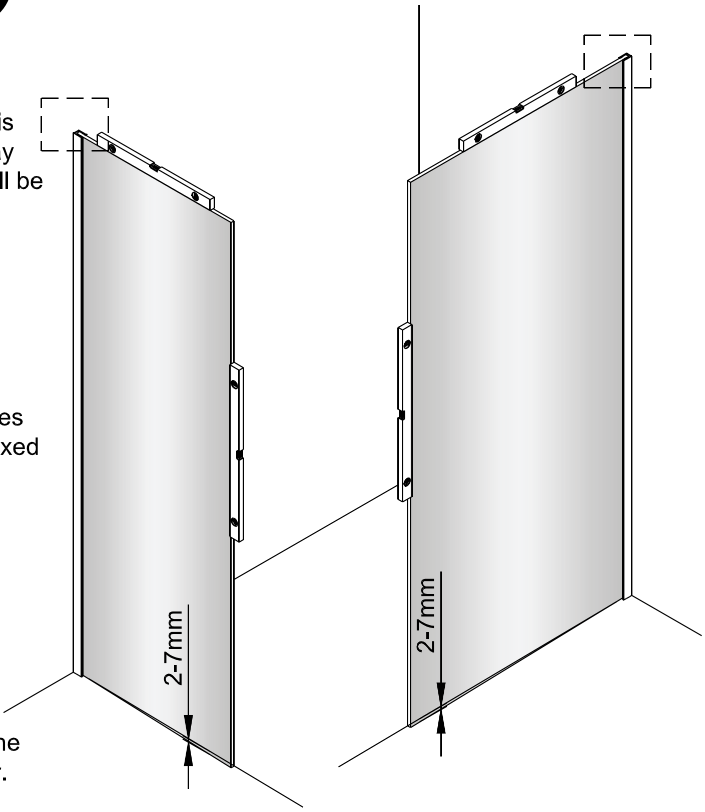

③

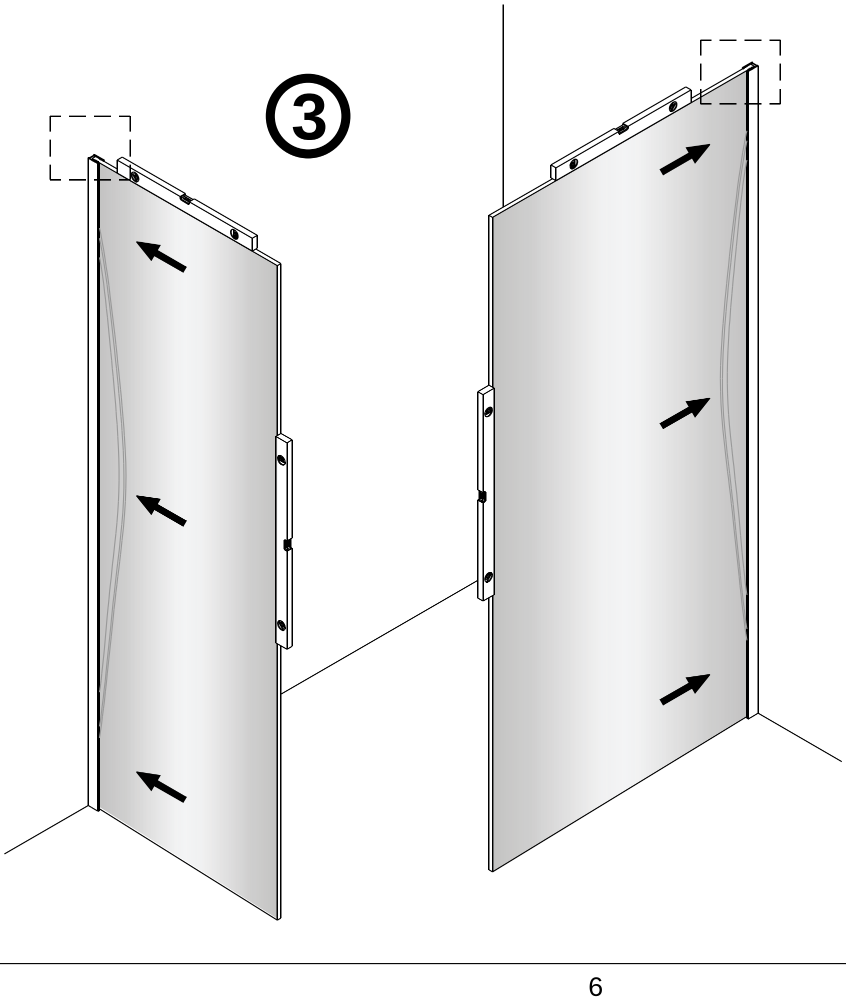

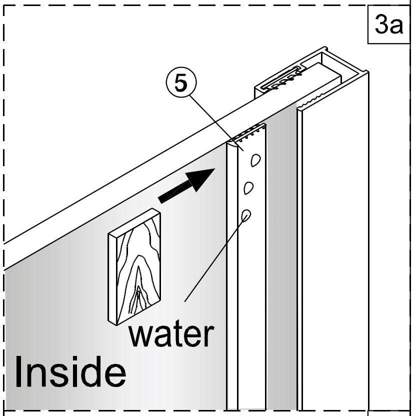
3a
5
water
Inside

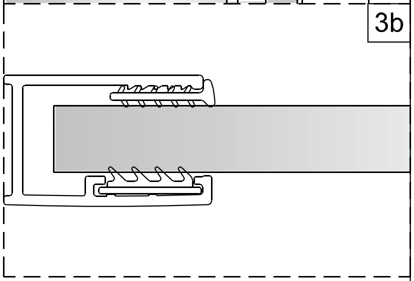

④

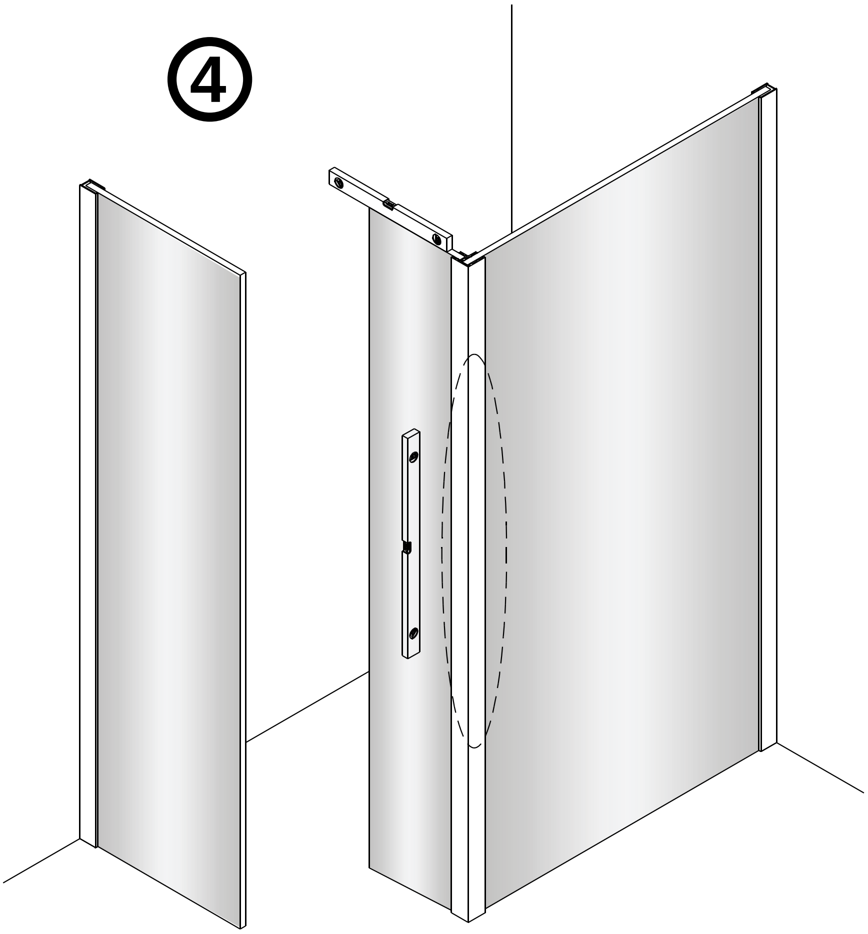

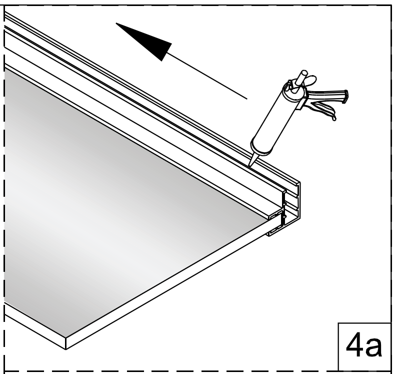
4a

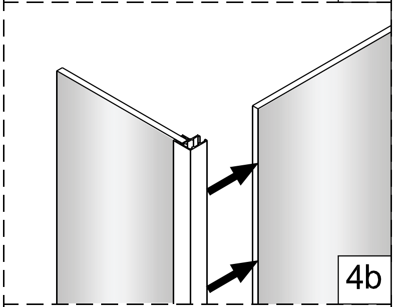
4b

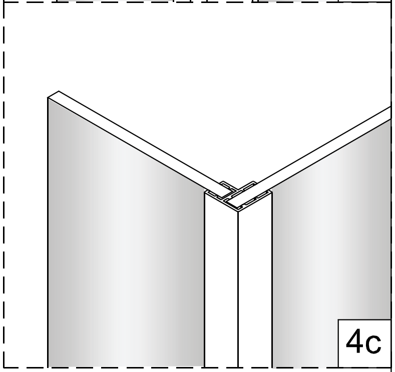
4c

⑤

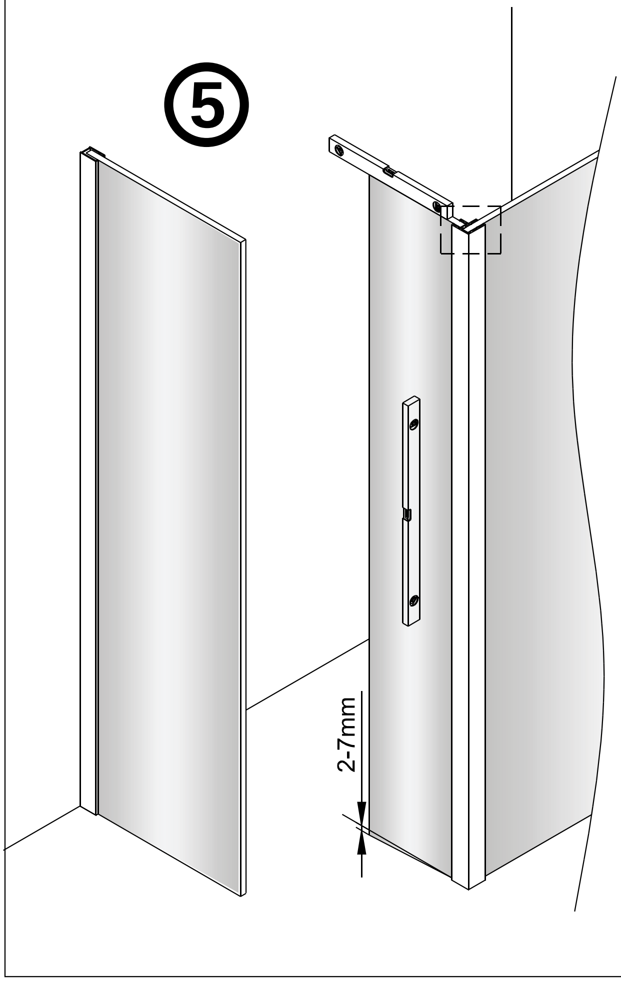

When the bottom fixed door is not in line with the floor or tray edge, the setting wedge 7 will be needed and can pad 2-7mm.

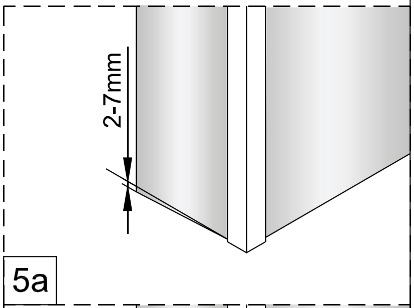

5a

Put silicone on the two wedges and place them to level the fixed door.

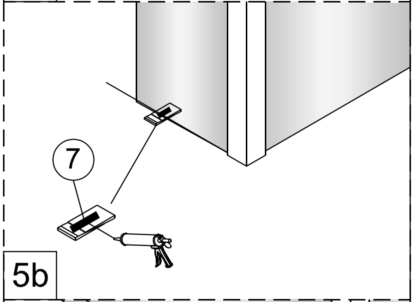

5b

Cut the extra part along the bottom edge of fixed door.

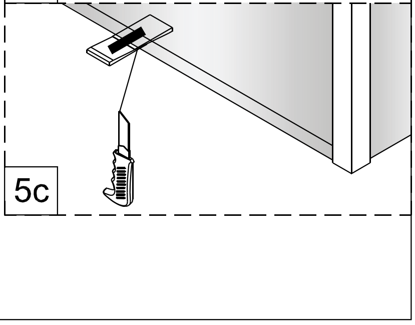
5c

⑥

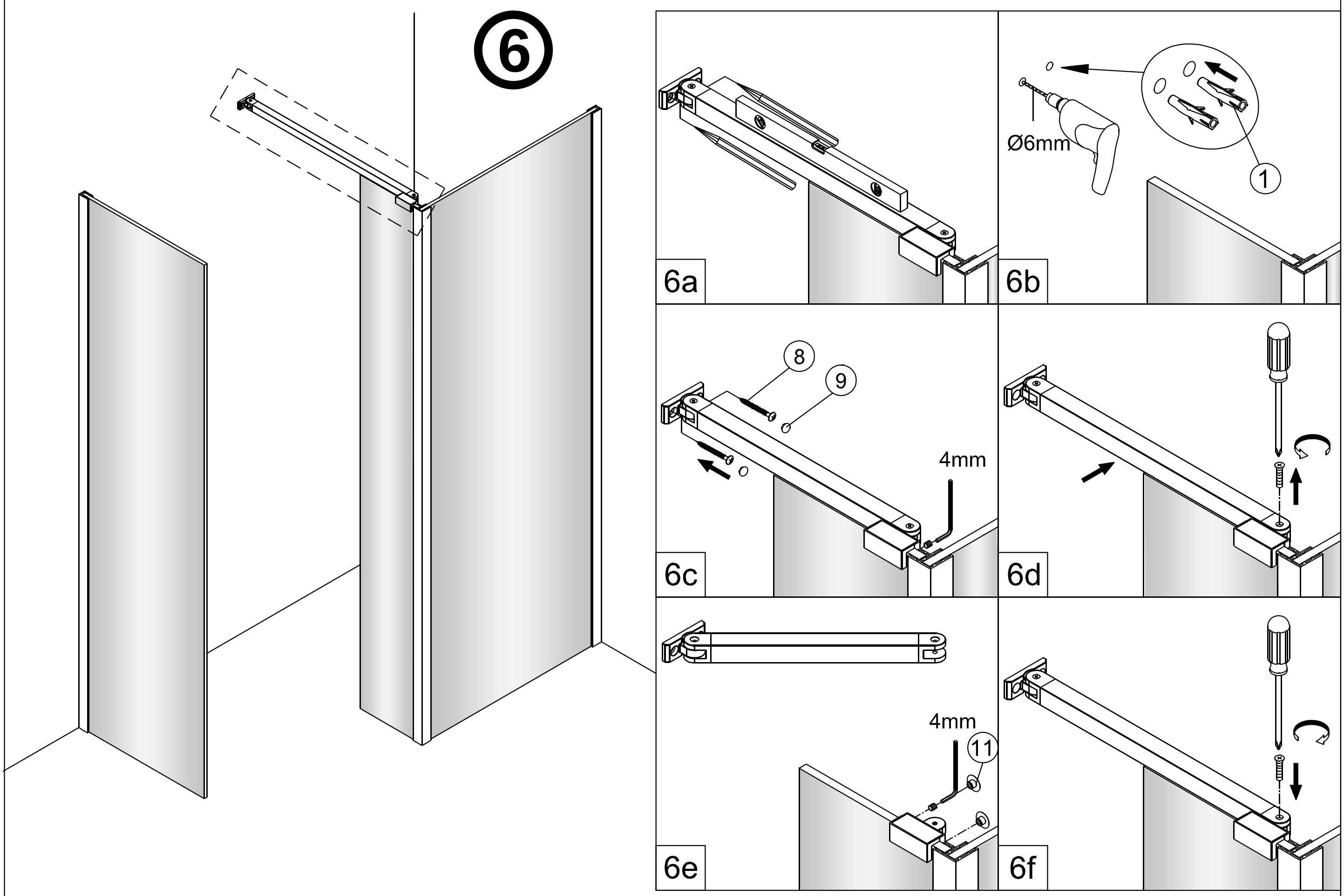
6a
6b
Ø6mm
①
6c
⑧
⑨
4mm
6d
6e
4mm
⑪
6f

⑦

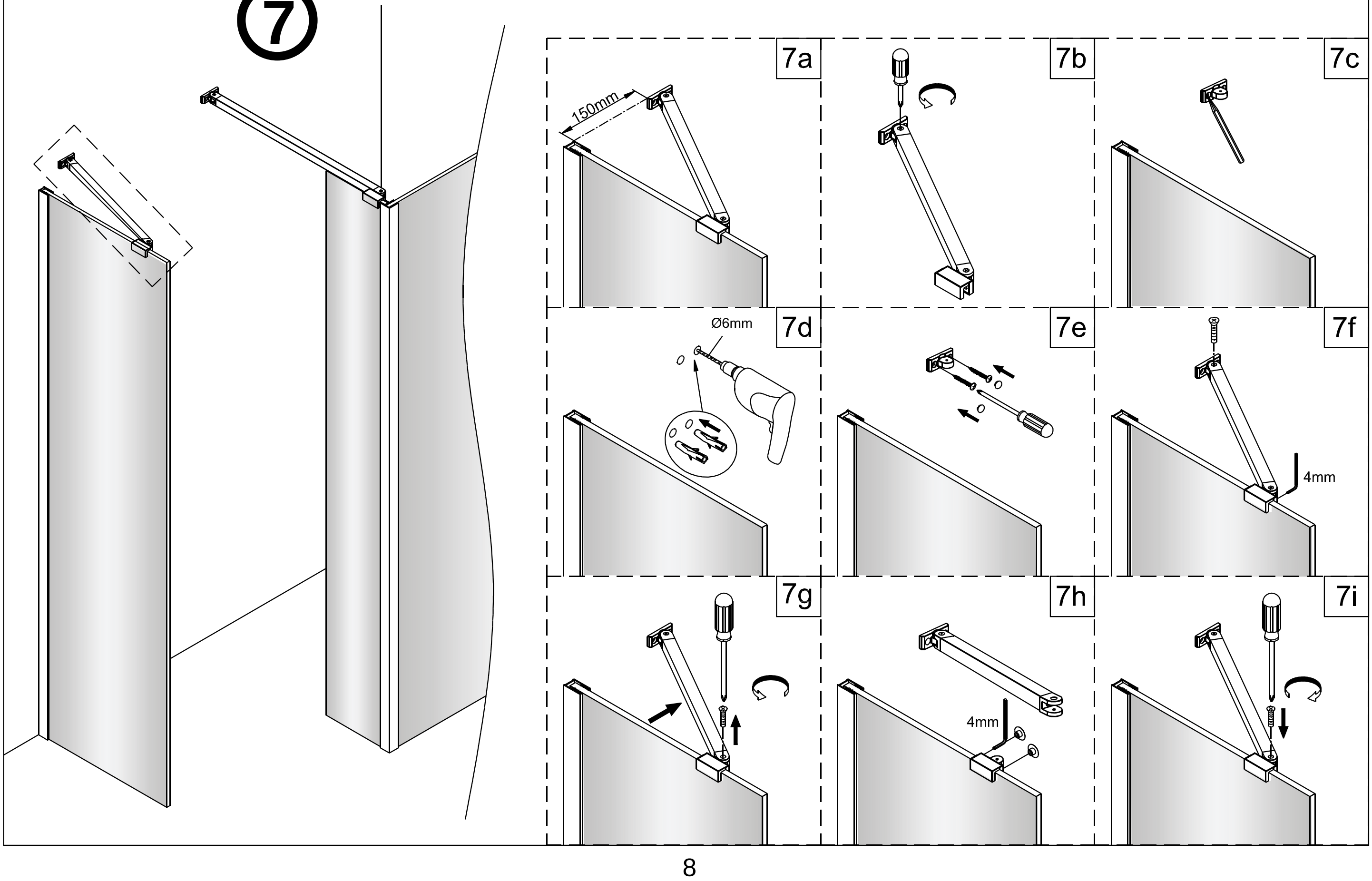
7a
150mm
7b
7c
7d
Ø6mm
7e
7f
4mm
7g
7h
4mm
7i

⑧

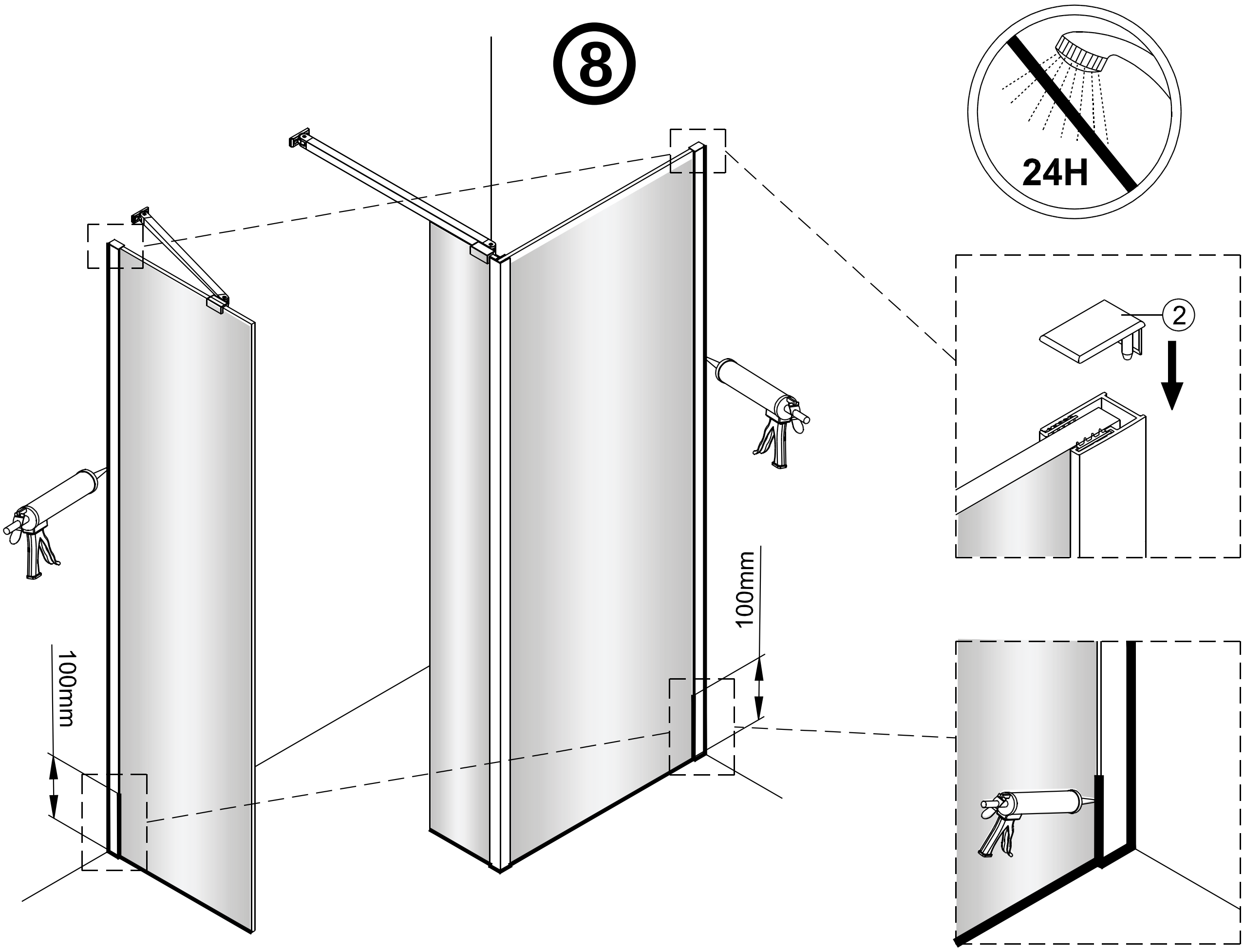
24H
2
100mm
100mm

SET C	BOX 1+BOX 3

①

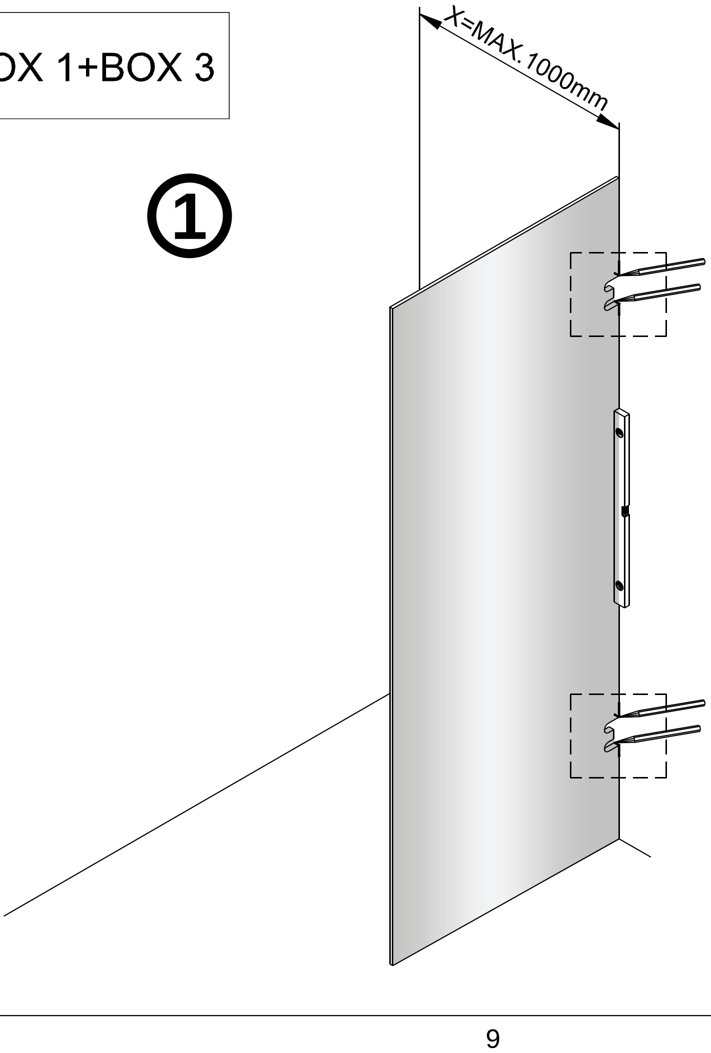
X=MAX.1000mm

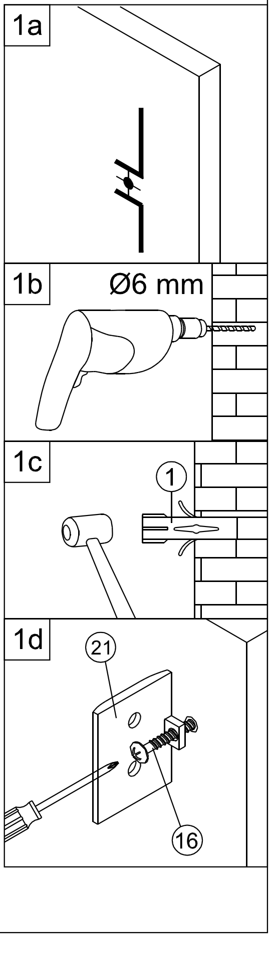
1a
1b
Ø6 mm
1c
1
1d
21
16

②

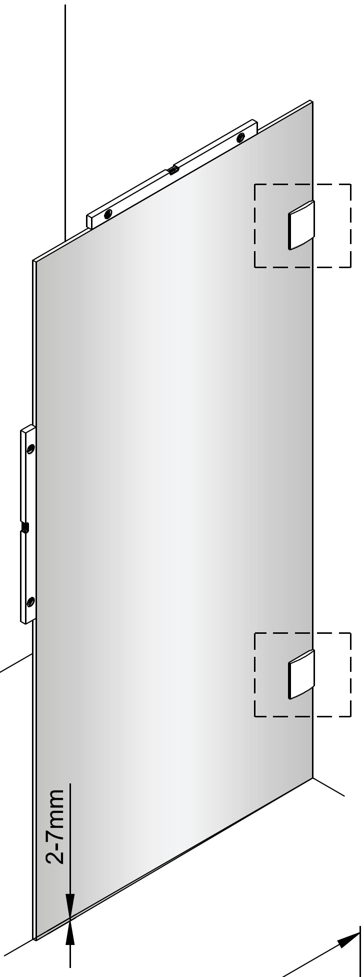

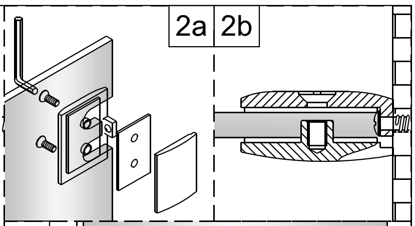

When the bottom fixed door is not in line with the floor or tray edge, the setting wedge 7 will be needed and can pad 2-7mm.

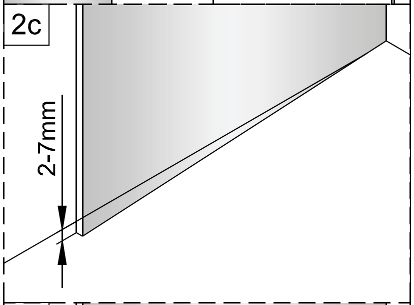

Put silicone on the two wedges and place them to level the fixed door.

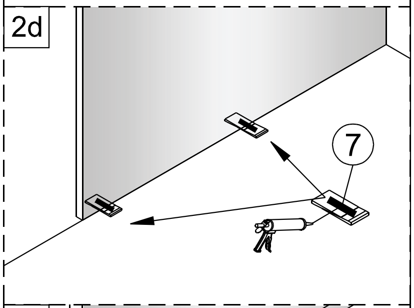

Cut the extra part along the bottom edge of fixed door.

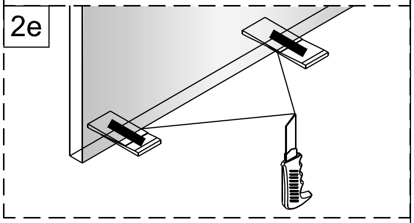

③

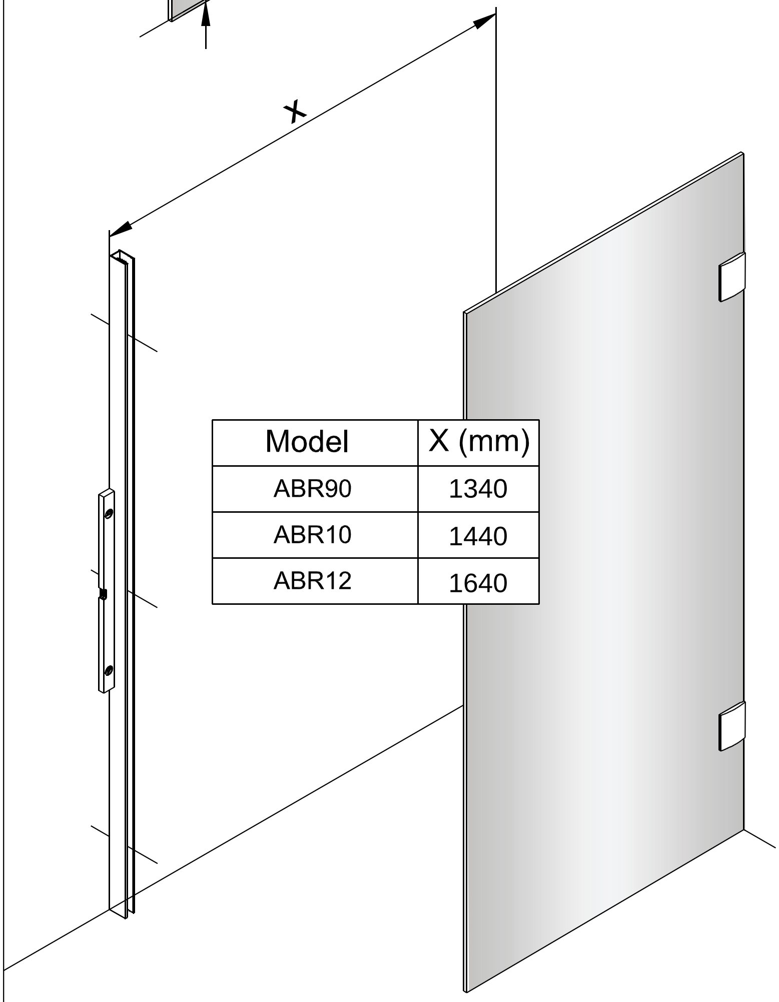

Model	X (mm)
ABR90	1340
ABR10	1440
ABR12	1640

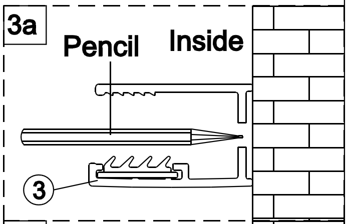
3a
Pencil
Inside
3

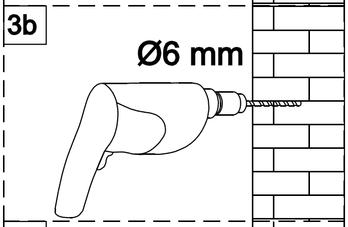

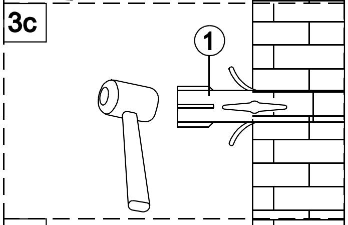

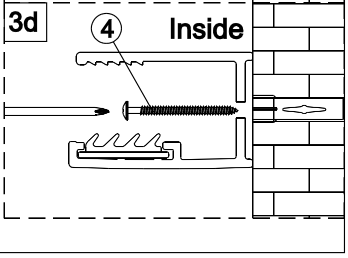

④

When the bottom fixed door is not in line with the floor or tray edge, the setting wedge 7 will be needed and can pad 2-7mm.

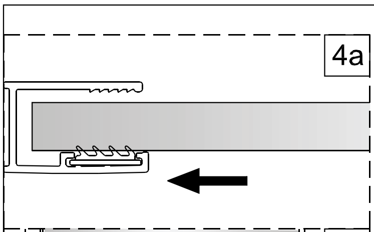
4a

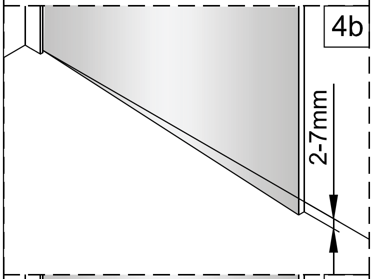
4b

Put silicone on the two wedges and place them to level the fixed door.

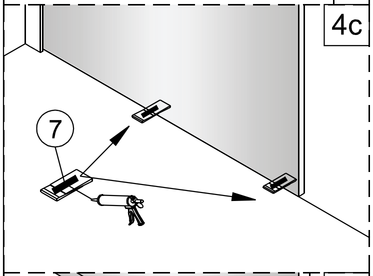
4c

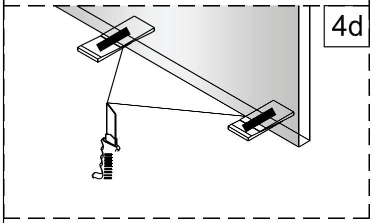
4d

Cut the extra part along the bottom edge of fixed door.

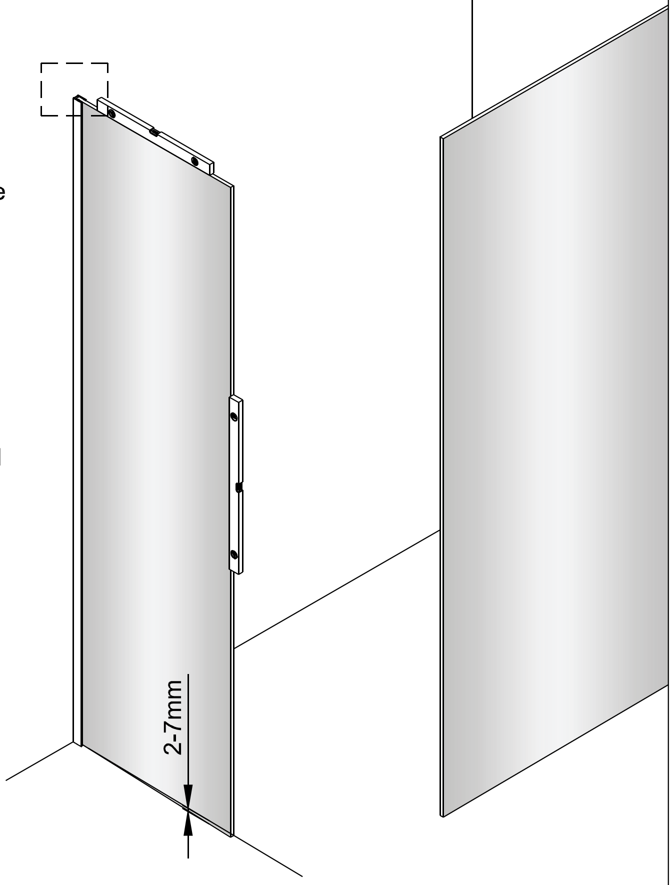

⑤

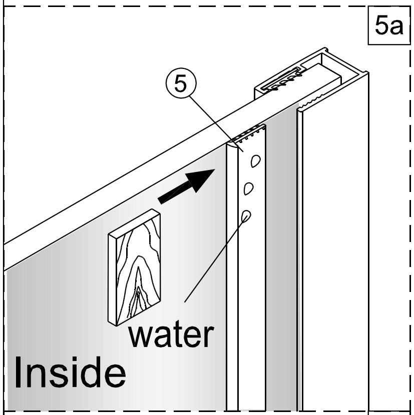
5a

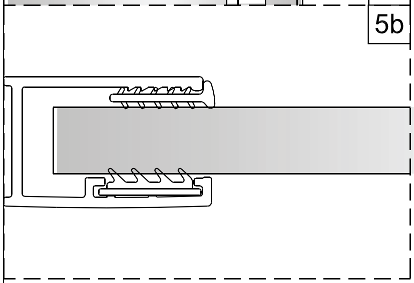
5b

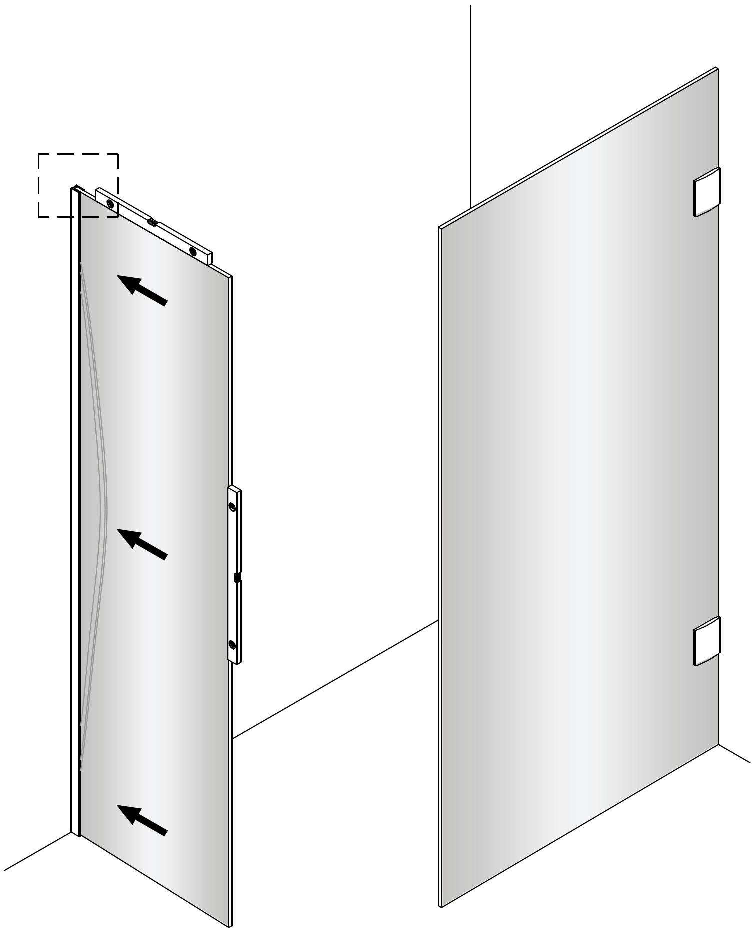

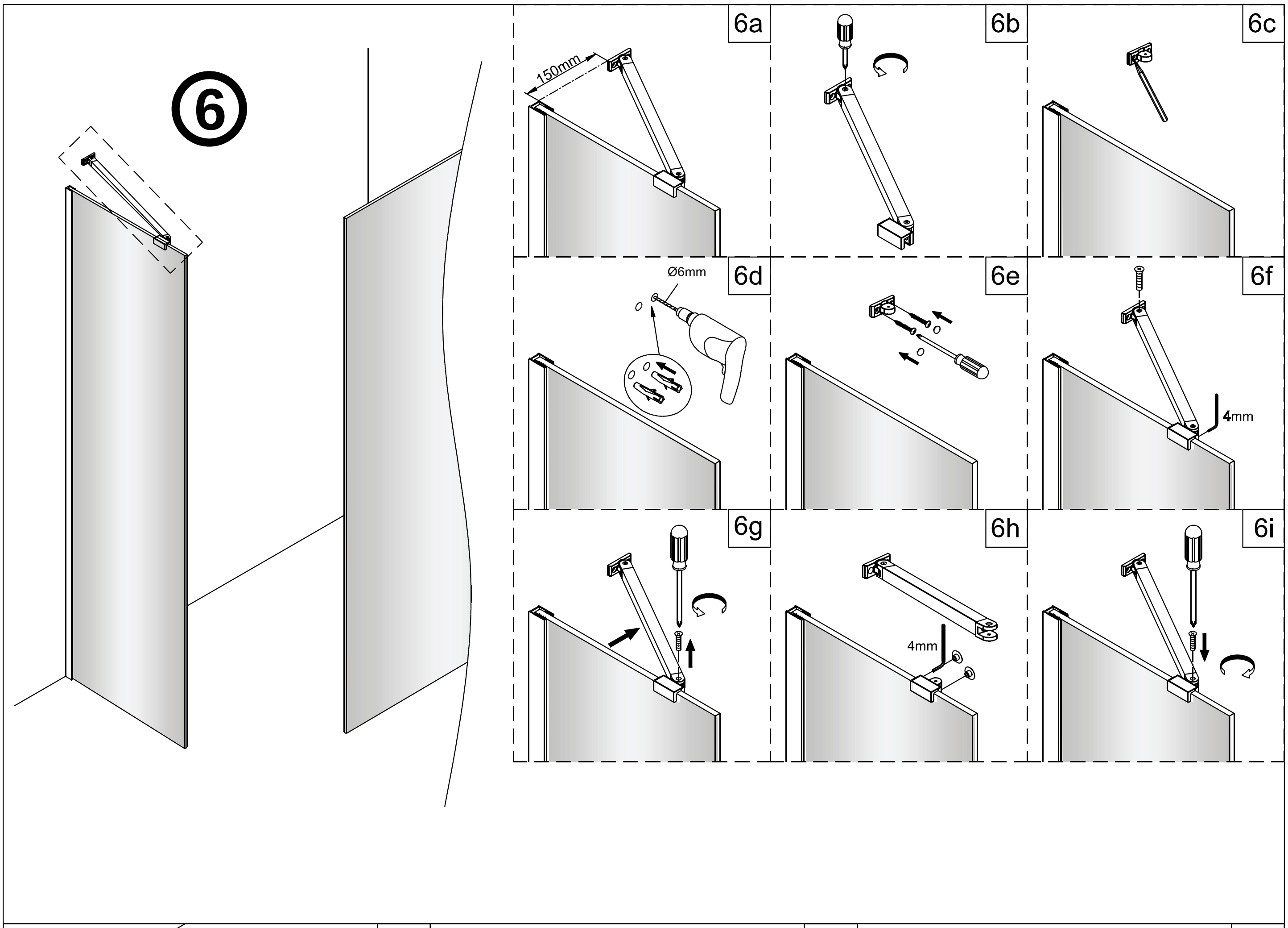
⑥
6a
150mm
6b
6c
6d
Ø6mm
6e
6f
4mm
6g
6h
4mm
6i

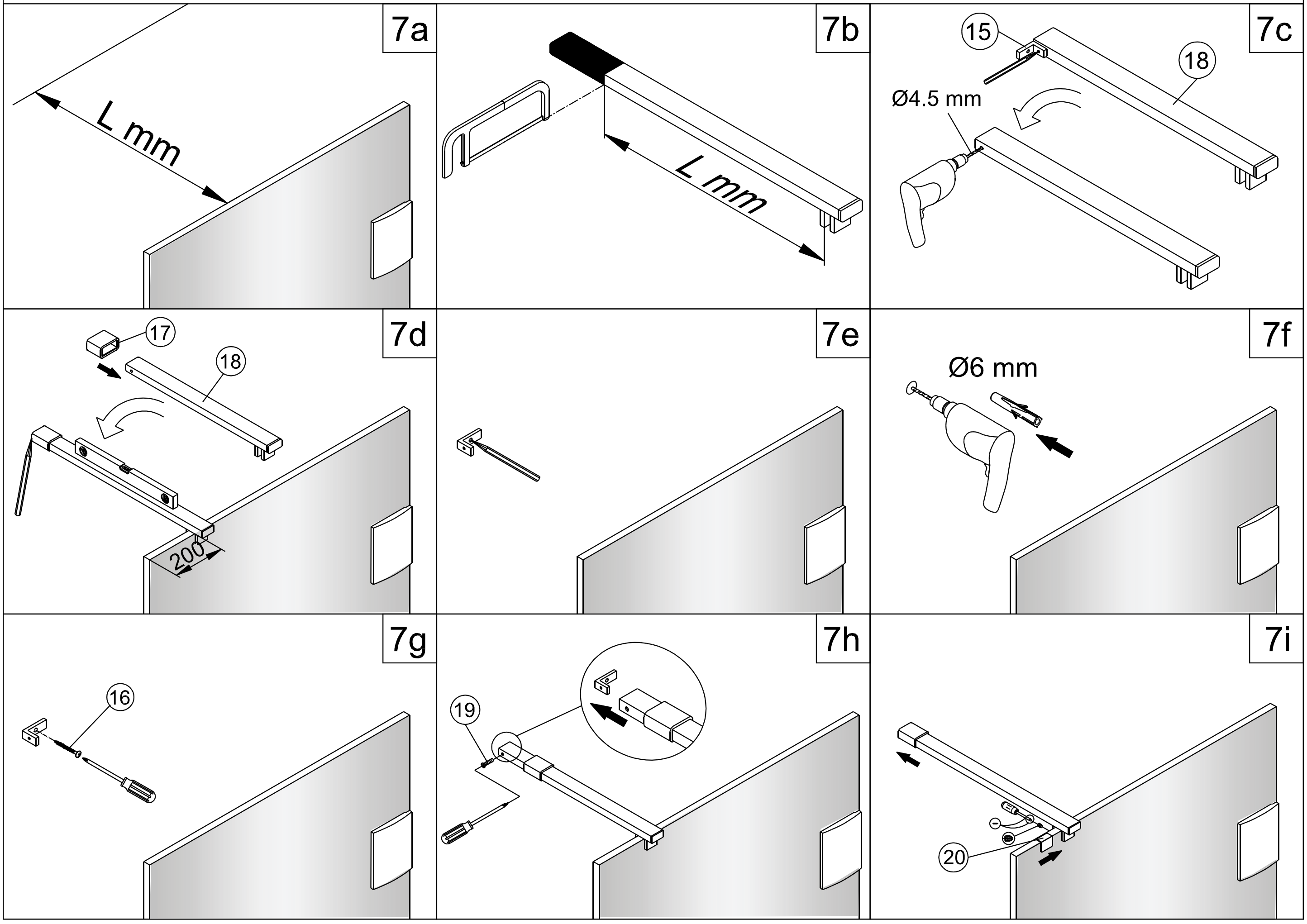
7a
L mm
7b
L mm
7c
15
18
Ø4.5 mm
7d
17
18
200
7e
7f
Ø6 mm
7g
16
7h
19
7i
20

⑧

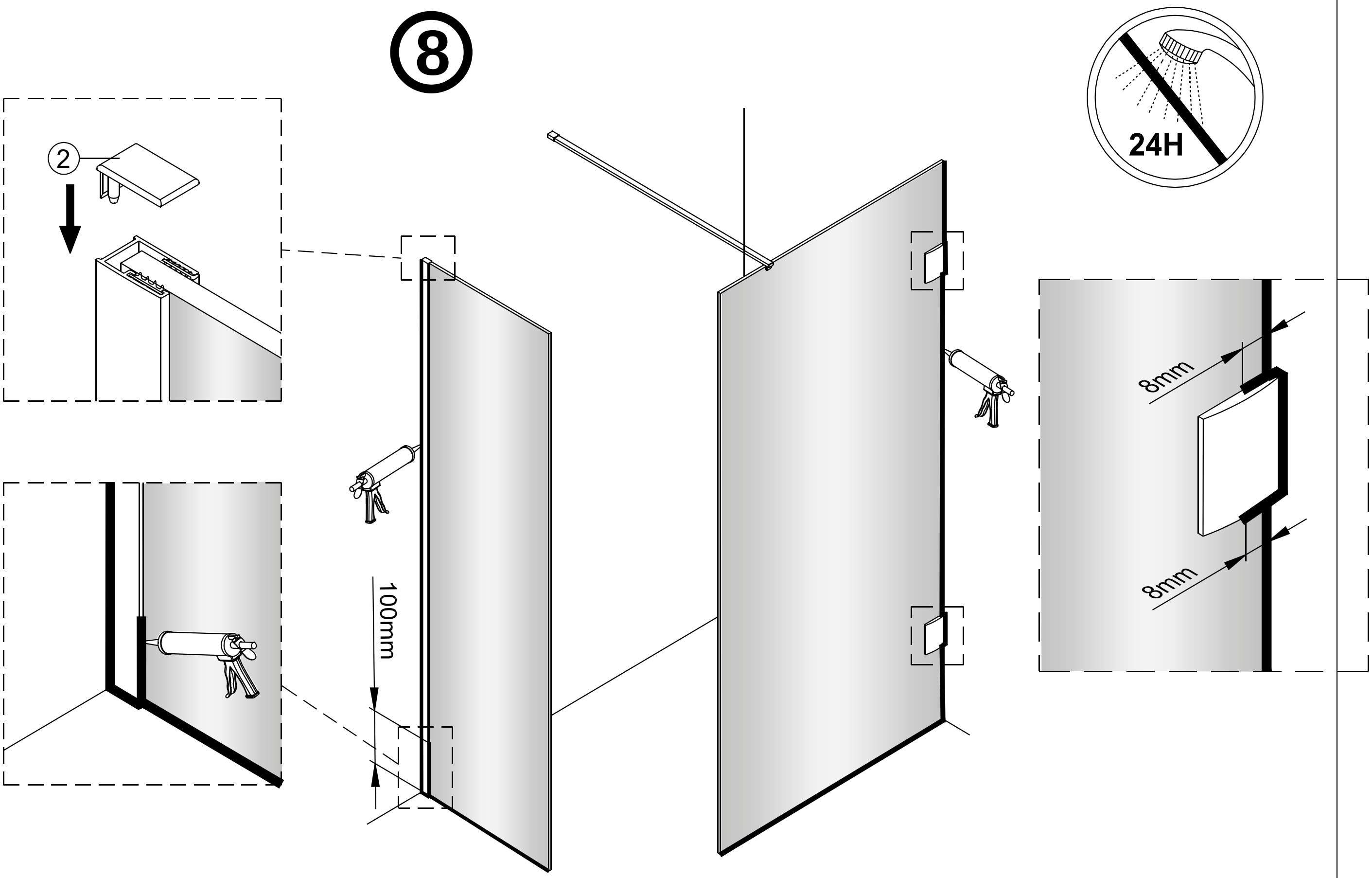
②
100mm
24H
8mm
8mm