LENGTH	WIDTH	HEIGHT
282	281	142
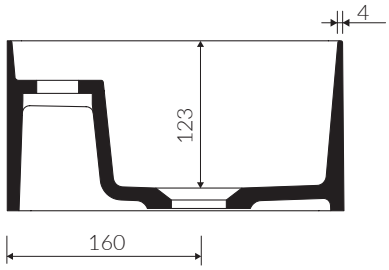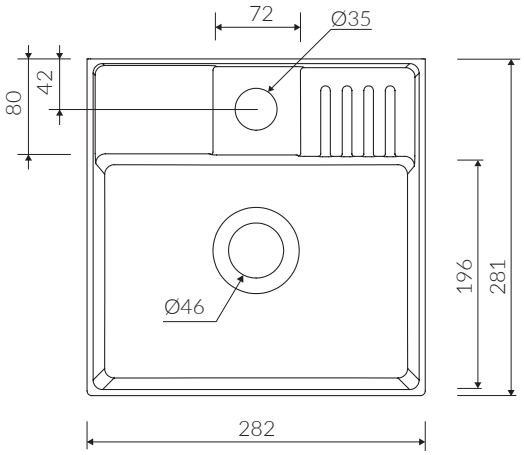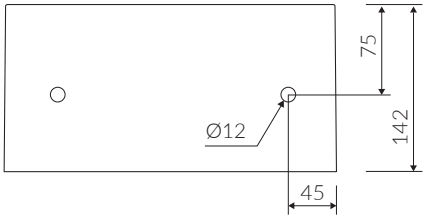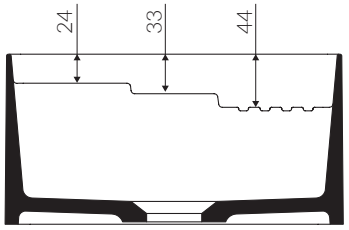
Weight : 6 kg