HORUS – SHOWER TRAY – 1700 X 900 X 45 MM **SKU 122127**

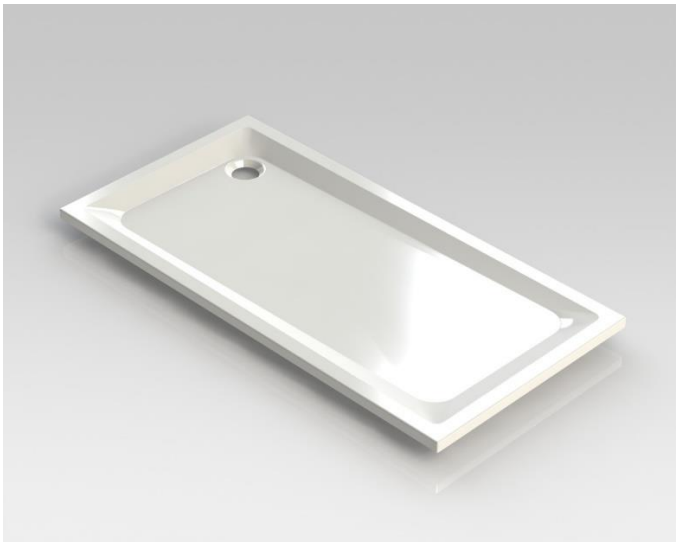

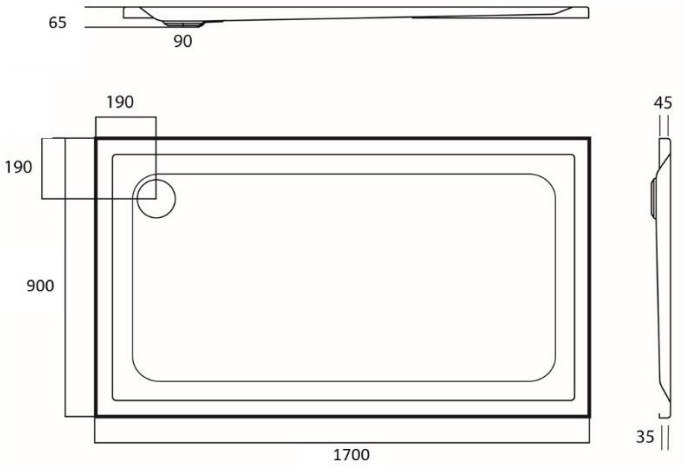

DIMENSIONS:

Length: 1700 mm
Width: 900 mm
Height: 45-60 mm

Shower tray	**Rectangular**
Material	**Acrylic**
Thickness	**4 mm**
Colour	**White high gloss**
Feet	**Not included**
Drainage	**Not included**
Drain Ø	**Diameter 90 mm**
Certified	**In accordance with EU standards**
Weight	**20 kg**
Warranty	**5 years**
Extra	**Option: - feet: sku 118005** **- standard siphon: sku 130133**

The dimensions, as well as the assortment can be modified without prior notice.