PACO – WASHBASIN / INTEGRATED TABLET – 80X46 SKU 930263

**DIMENSIONS:** **Length: 800 mm**
**Depth: 460 mm**
**Height: 15 mm**

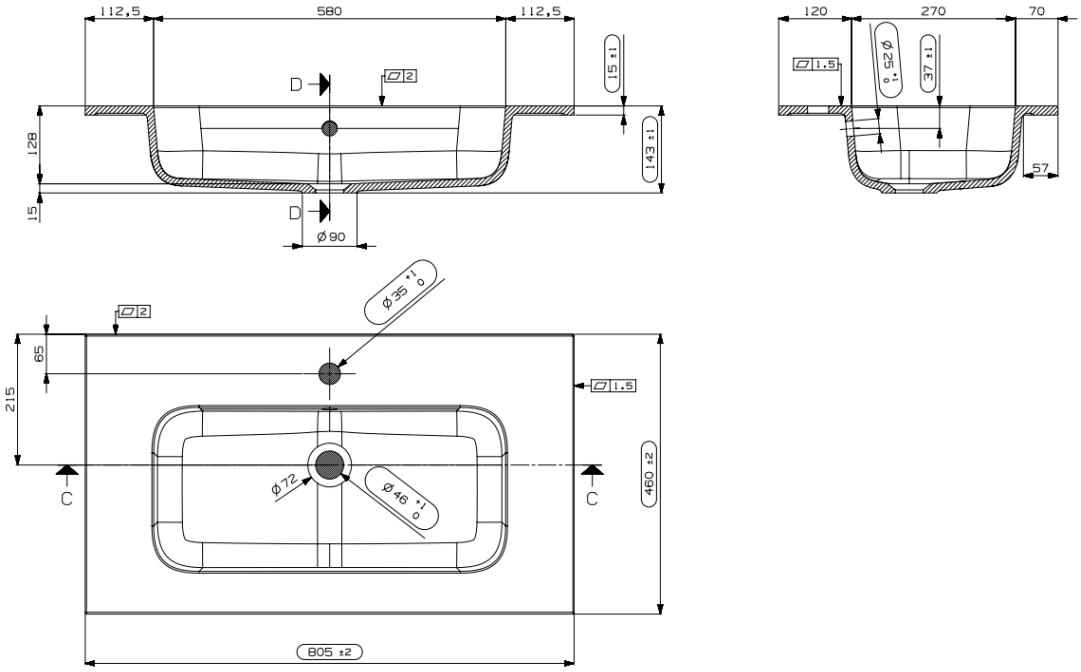


| | |
|---|---|
| Washbasin | Tablet – 1 Washbasin |
| Material | Artificial marble |
| Color | Glossy white |
| Mounting | Tablet |
| With tap hole | Yes |
| With overflow | Yes |


The dimensions, as well as the assortment can be modified without prior notice.