# **wash me_**110 cm double washbasin, composite

CL/02.13039, CL/02.26039, CL/02.27039
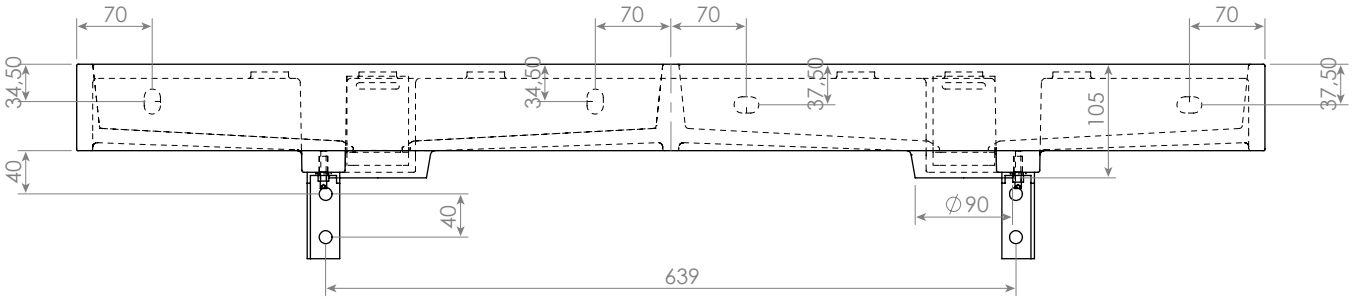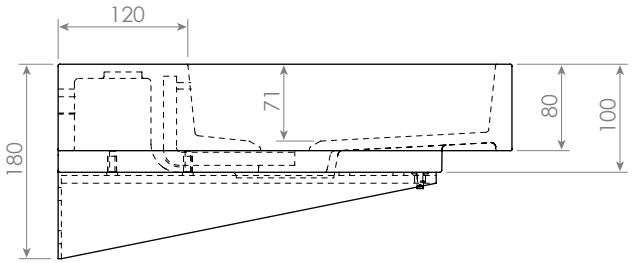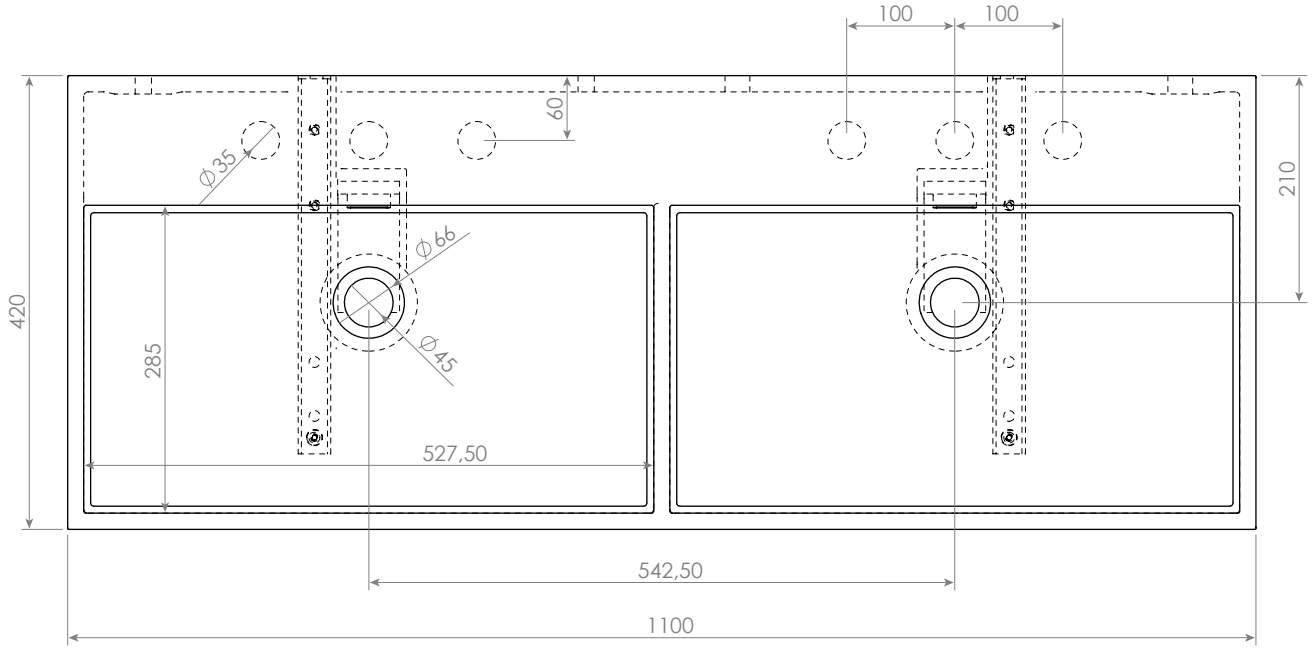
clou
bath findings