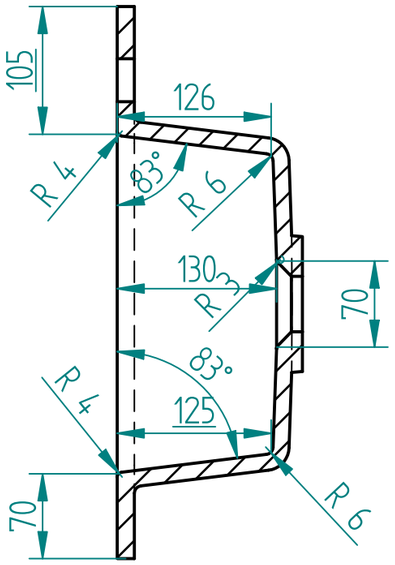

SECTION B-B

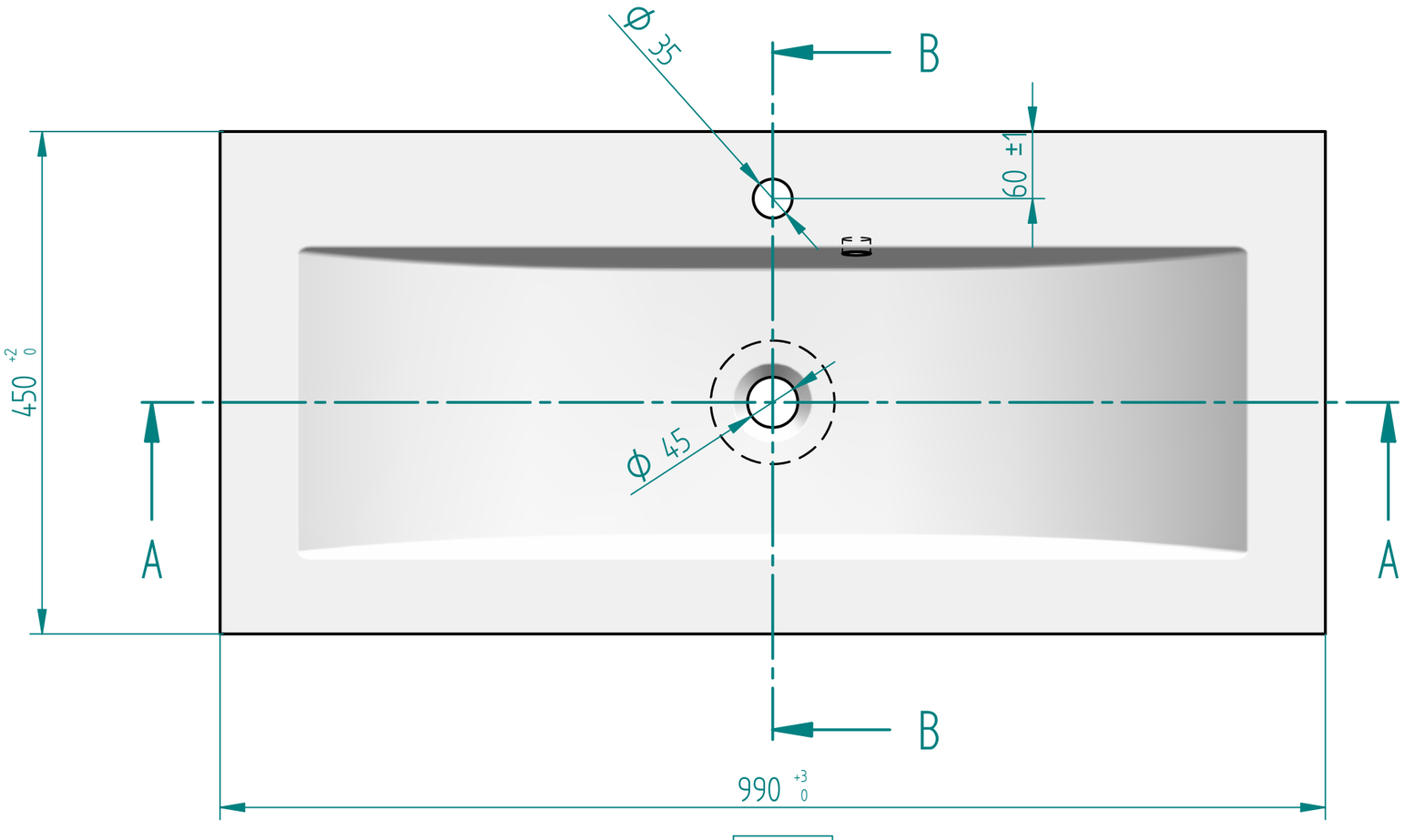

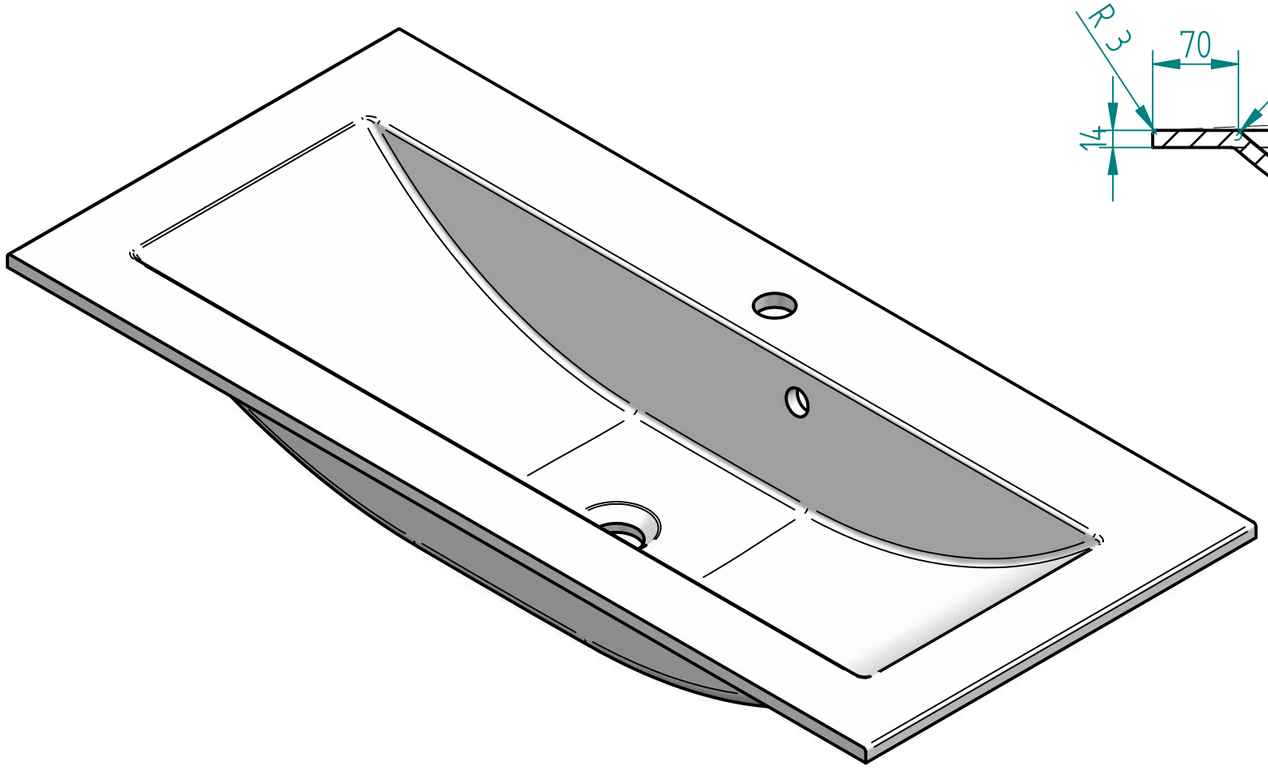

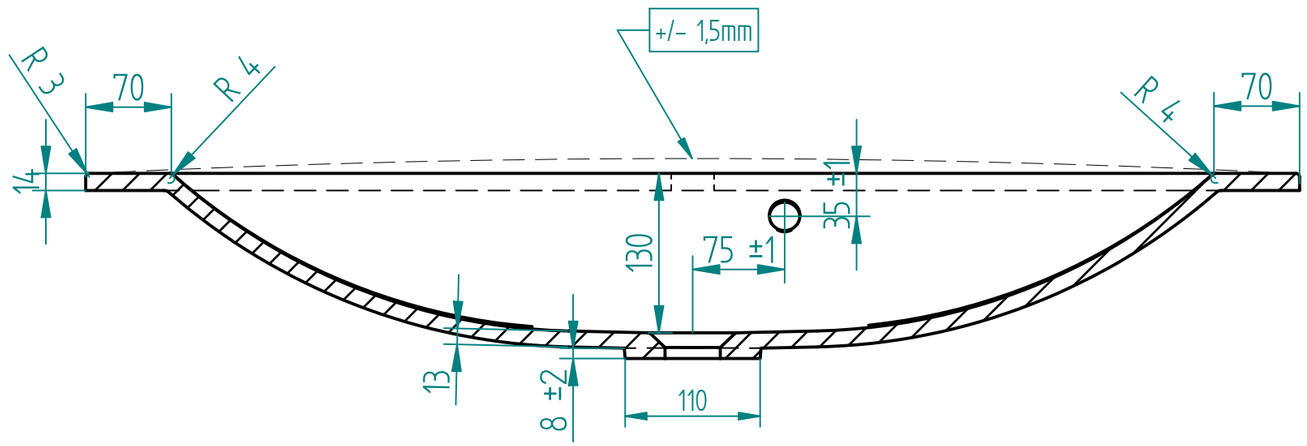

SECTION A-A