PACO – WASHBASIN / INTEGRATED TABLET – 180X46 SKU 930276

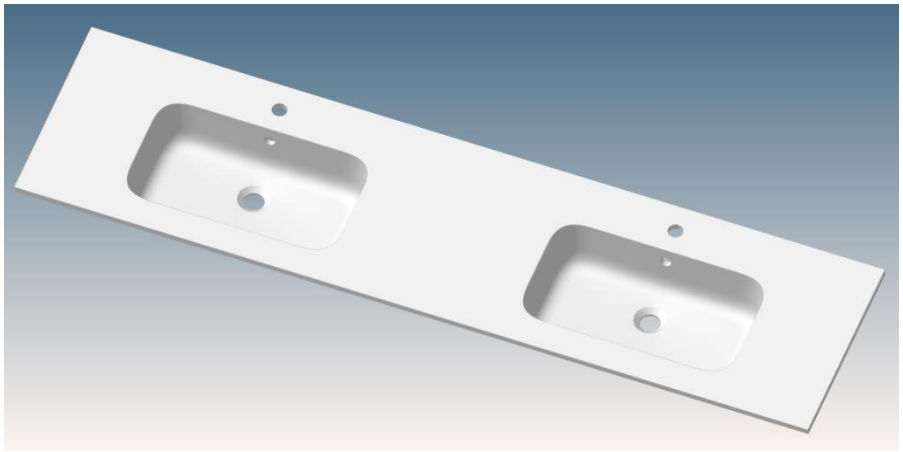

DIMENSIONS:

Length: 1800 mm
Depth: 460 mm
Height: 15 mm

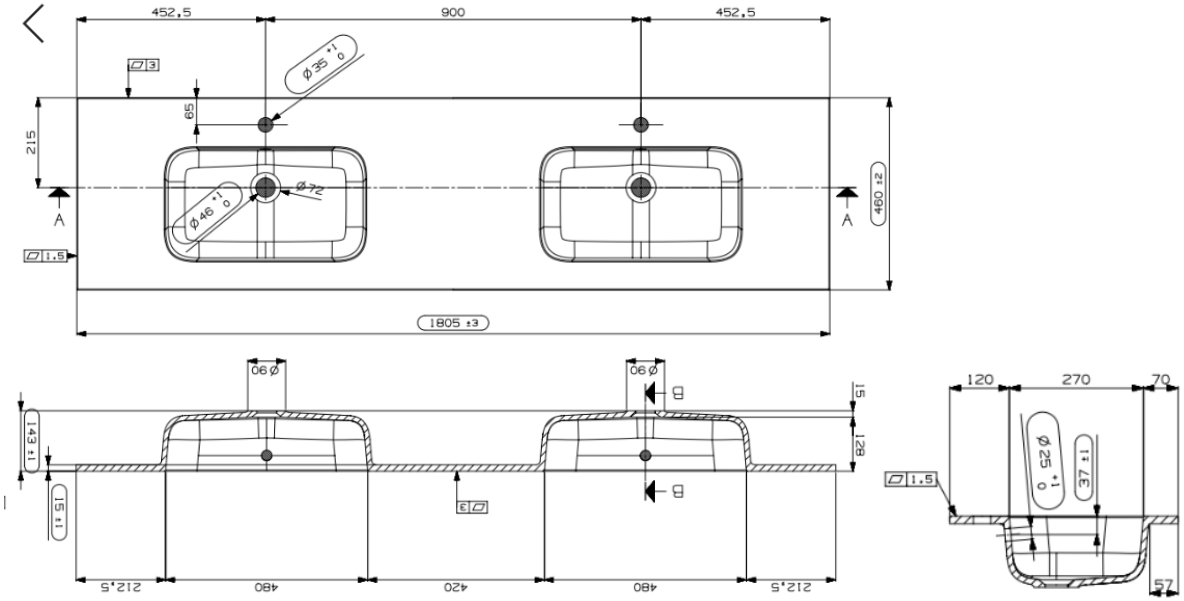

Washbasin	Tablet – 2 Washbasins
Material	Artificial marble
Color	Glossy white
Mounting	Tablet
With tap hole	Yes
With overflow	Yes

The dimensions, as well as the assortment can be modified without prior notice.