measurements in millimetres (mm)
information updated september 2013

tel | 01322 422767
web | www.crosswater.co.uk
email | technical@crosswater-holdings.co.uk

crosswater
TECHNICAL

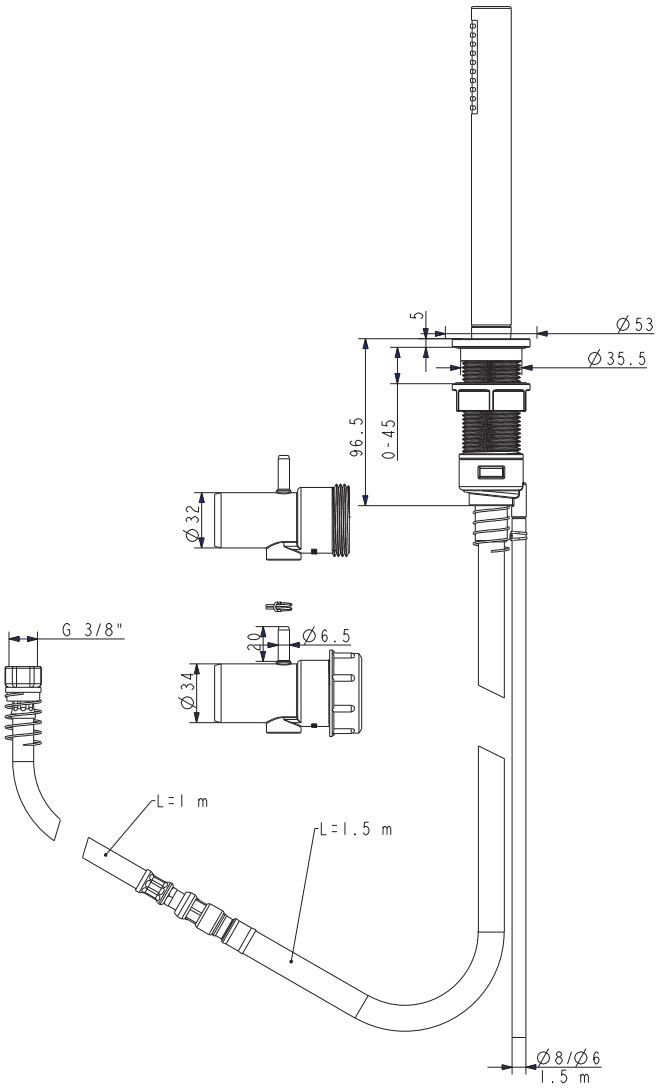

MIKE
PRO

Single Mode Shower Kit

Deck Mounted

PRO812

Available in Chrome (C) Brushed Stainless Steel (V) or Brushed Chrome (J)