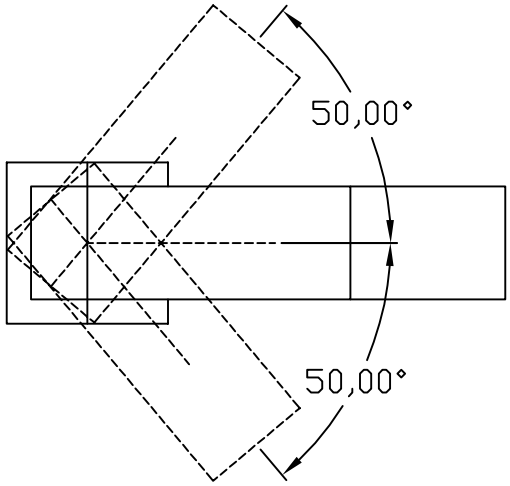
50,00°
50,00°

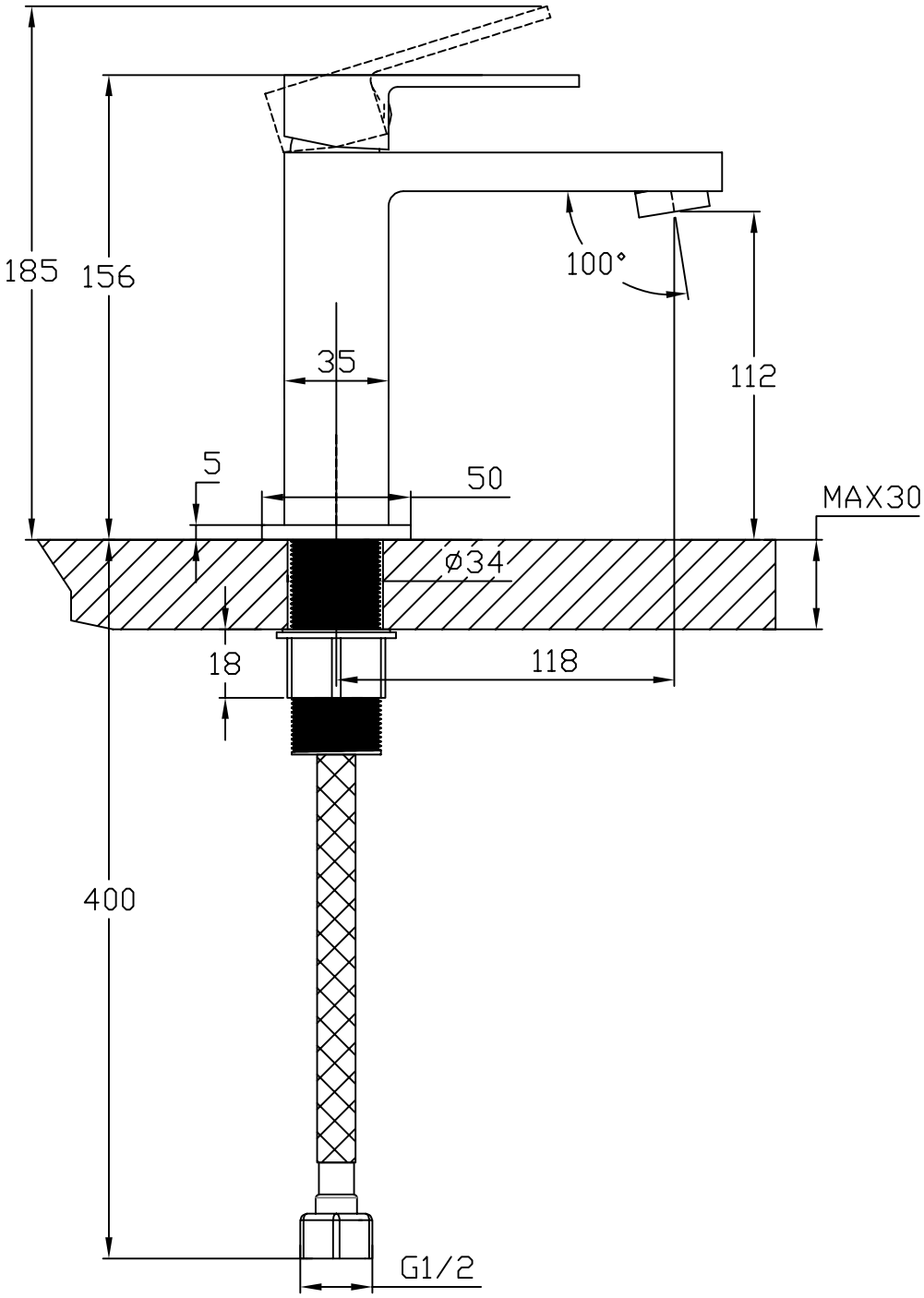
185
156
100°
35
112
5
50
MAX30
ø34
18
118
400
G1/2